ORDER NO. AD9104090C8

Service Manual

Compact Disc Player

SL-PJ325

COMPACT disc DIGITAL AUDIO

DIGITAL

Color

(K)... Black Type

Area

Country Code	Area	Color
(E)	Continental Europe.	(K)
(GC)	Asia, Latin America, Middle Near East and Africa.	
(GN)	Oceania.	

SL-P333 MECHANISM SERIES (SIWD 113-3ZA)

SPECIFICATIONS

■ Audio

No. of channels	2 (left and right, stereo)
Frequency response	2–20,000 Hz, ±1 dB
Output voltage	2 V (at 0 dB)
Dynamic range	94 dB
S/N ratio	96 dB
Wow and flutter	Below measurable limit
Output impedance	Approx. 1 kΩ
Load impedance	More than 10 kΩ

■ Pickup

Wavelength	780 nm

■ General

Power supply	
For (E) area:	AC 50/60 Hz, 230 V~240 V
For (GN) area:	AC 50/60 Hz, 230 V~240 V
For (GC) area:	AC 50/60 Hz, 110 V/127 V/220 V/240 V
Power consumption	10 W
Dimensions (W×H×D)	360×95.8×290.5 mm
Weight	3.4 kg

Note:
Specifications are subject to change without notice.
Weight and dimensions are approximate.

■ CONTENTS

	Page
PLACEMENT	2
CONNECTIONS	2
PRECAUTION OF LASER DIODE	3
FRONT PANEL CONTROLS AND FUNCTIONS	4, 5
ACCESSORIES	5
HANDLING PRECAUTIONS FOR OPTICAL PICKUP	6
INSTRUCTIONS FOR TRAVERSE OIL	6
DISASSEMBLY INSTRUCTIONS	7~10
MEASUREMENTS AND ADJUSTMENTS	11~16
TERMINAL FUNCTION OF IC'S	16~20
BLOCK DIAGARAM	21~23
INTERNAL CONNECTION OF FL	24
SCHEMATIC DIAGRAM	25~30
PRINTED CIRCUIT BOARDS	31~34
WIRING CONNECTION DIAGRAM	35
TROUBLE SHOOTING GUIDE	36~38
REPLACEMENT PARTS LIST	39
EXPLODED VIEWS	40~42
REPLACEMENT PARTS LIST	43, 44
RESISTORS & CAPACITORS	45, 46
PACKING	46

Panasonic

PLACEMENT

Before placement

The optical pickup is secured to prevent damage during transport. Be sure to release it before use.

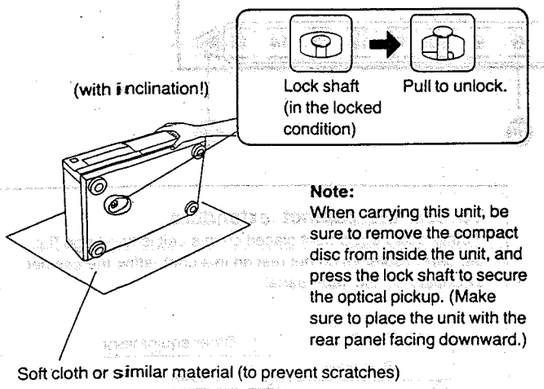

Note:
When carrying this unit, be sure to remove the compact disc from inside the unit, and press the lock shaft to secure the optical pickup. (Make sure to place the unit with the rear panel facing downward.)

Notes of placement

- **This unit is a precision instrument. Be sure to place it on a flat surface.**
- **Avoid places such as the following:**
  - Near any equipment or device that generates strong magnetism.
  - On any heat-generating equipment or device, or in any place where the temperature is high (35°C or higher).
  - Extremely cold places (5°C or below).
  - Near a tuner or TV (It may cause noise in the broadcast, or disturbance of the TV picture.)
- **When carrying or storing the unit, handle it with care so it is not subjected to any strong bumps.**
  Always remove the disc before storing the unit for any period of time.
- **To avoid problems due to vibration.**
  - Do not place a book or similar object under this unit.
  - Do not route the connection cables (of this or other units) across the operation panel, across the top, or under the unit.

CONNECTIONS

Notes:
- Turn power off on all components before making connections.
- See the operating instructions of the compact audio system for details.

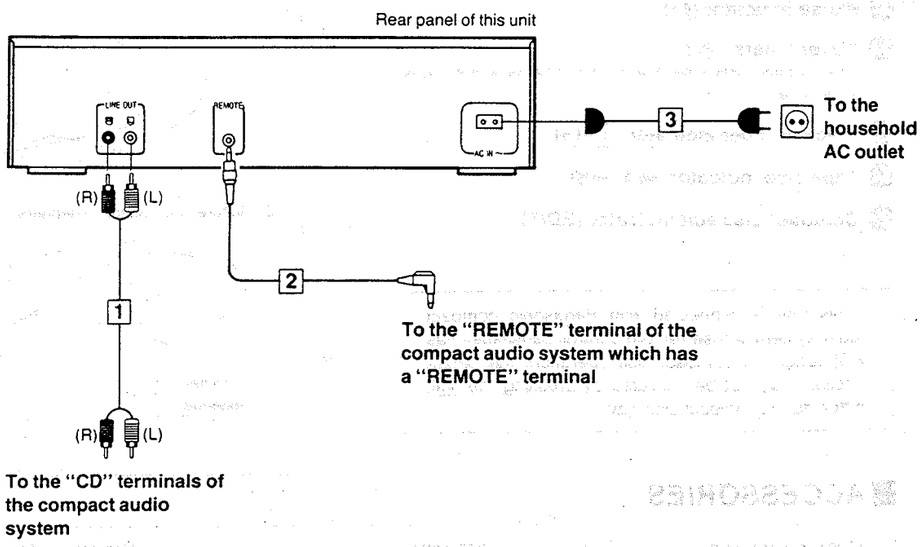

1 Stereo connection cable (included)

2 L-type cable (included)
This cable can be used only with a Panasonic compact audio system having the appropriate "REMOTE" terminal.

3 AC power supply cord (included)
Note:
The configuration of the AC outlet and AC power supply cord differs according to area.

For areas except Continental Europe
If the power plug will not fit your socket, use the power plug adaptor (included).

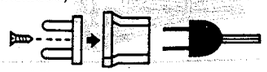

PRECAUTION OF LASER DIODE

CAUTION: This product utilizes a laser diode with the unit turned "on", invisible laser radiation is emitted from the pick up lens.
Wave length: 780nm
Maximum output radiation power from pick up: 100μW/VDE

Laser radiation from the pick up lens is safety level, but be sure the followings:

1. Do not disassemble the optical pick up unit, since radiation from exposed laser diode is dangerous.
2. Do not adjust the variable resistor on the pickup unit. It was already adjusted.
3. Do not look at the focus lens using optical instruments.
4. Recommend not to look at pick up lens for a long time.

ACHTUNG: Dieses produkt enthält eine laserdiode. Im eingeschalteten zustand wird unsichtbare laserstrahlung von der lasereinheit abgestrahlt.

Wellenlänge: 780nm
Maximale strahlungsleistung der lasereinheit: 100μW/VDE

Die strahlung an der lasereinheit ist ungefährlich, wenn folgende punkte beachtet werden:

1. Die lasereinheit nicht zerlegen, da die strahlung an der freigelegten laserdiode gefährlich ist.
2. Den werksseitig justierten einstellregler der lasereinreit nicht verstellen.
3. Nicht mit optischen instrumenten in die fokussierlinse blicken.
4. Nicht über längere zeit in die fokussierlinse blicken.

ADVARSEL: I dette a apparat anvendes laser.

• Use of caution labels

Note: ○ Mark is used, × Mark is not used.

Areas	SQWD7	RQLS0021	RQLS0051
(E)	○	○	○
Others	○	○	×

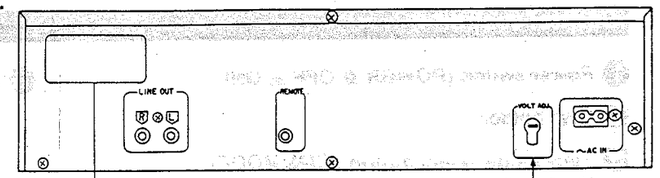

For [GC] area.

RQLS0051

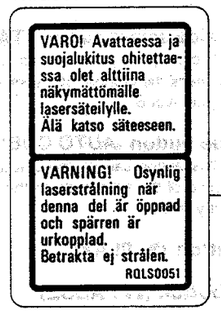

SQWD7

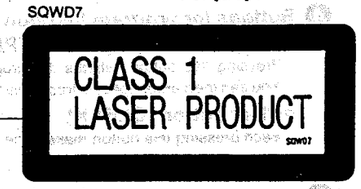

Obs:
Apparaten innehåller laser
Komponent av höger laserklass
än klass 1.

RQLS0021

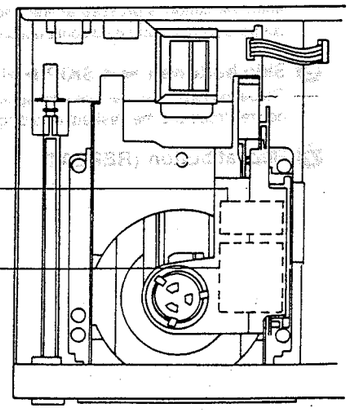

■ FRONT PANEL CONTROLS AND FUNCTIONS

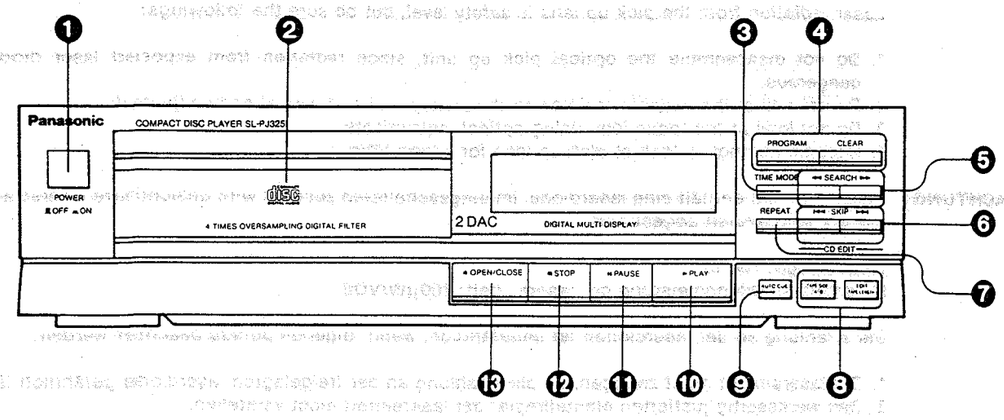

Control section

❶ **Power switch (POWER ▮ OFF ▬ ON)**

❷ **Disc holder**

❸ **Time mode select button (TIME MODE)**
Use this button to select the desired time display mode.

❹ **Buttons for program function**
- **Programmed-play button (PROGRAM)**
  Pressing this button initiates the programmed play mode. You can then enter specific tracks using the skip buttons.
- **Clear button (CLEAR)**
  Each pressing this button makes one track cleared from the programmed sequence.

❺ **Search buttons (◀◀ SEARCH ▶▶)**
These buttons can be used to move rapidly forward or backward on the disc during play. The search speed is slow when the button is pressed at first and becomes faster if the button is pressed and held continuously.

❻ **Skip buttons (⏮ SKIP ⏭)**
These buttons can be used to specify the number of the desired track and the desired recording time of the tape.

❼ **Repeat button (REPEAT)**

❽ **Buttons for CD edit function (CD EDIT)**
- **Edit tape length button (EDIT TAPE LENGTH)**
  When compact discs are to be recorded to tape, this button can be used to calculate the number of tracks that can be recorded on each side of the tape, depending on the length of the cassette tape used, so that as little tape as possible is wasted.
- **Tape-side select button (TAPE SIDE A/B)**
  When recording compact discs to tape, this button can be used to check the number of tracks and amount of tape left over for side A or B.

❾ **Auto cue button (AUTO CUE)**
Pressing this button causes the unit to skip automatically to the beginning of the next track on the disc and switch to the play standby mode.

❿ **Play button (▶ PLAY)**

⓫ **Pause button (❚❚ PAUSE)**

⓬ **Stop button (■ STOP)**
This button can be used to stop the disc play, as well as to cancel the various play modes.

⓭ **Disc holder open/close button (▲ OPEN/CLOSE)**

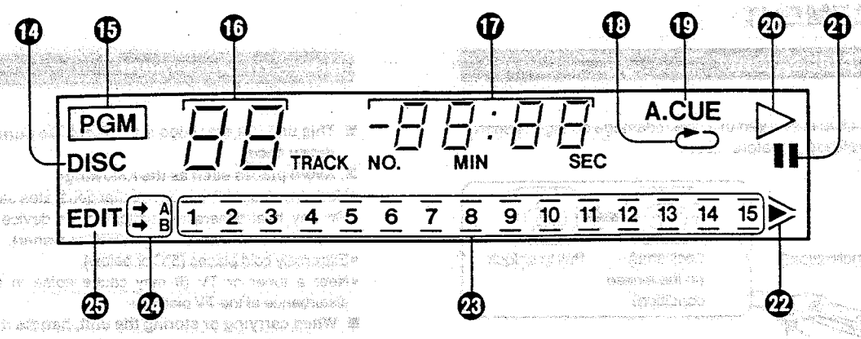

Indicators section

⓮ **Disc indicator (DISC)**

⓯ **Programmed-play indicator (PGM)**

⓰ **Track number display (TRACK)**

⓱ **Program number/time display (NO., MIN, SEC)**

⓲ **Repeat indicator ( )**

⓳ **Auto cue indicator (A. CUE)**

⓴ **Play indicator (▷)**

㉑ **Pause indicator (❚❚)**

㉒ **"Over" mark (▶)**
This indicator lights if the total number of tracks on the disc is 16 or more.

㉓ **Track number indicator (1 -15)**

㉔ **Tape side indicator (➡A, ➡B)**

㉕ **Compact disc edit indicator (EDIT)**

> If this unit is connected with Panasonic compact audio system whose remote control transmitter has ▶/❚❚ button for compact disc operation, the pause function may not be activated by pressing the ▶/❚❚ button during compact disc play.

To use the cabinet extenders
If other audio equipment placed on this unit is too large (i.e., the back insulators do not rest on this unit), affix the cabinet extenders to the rear panel.

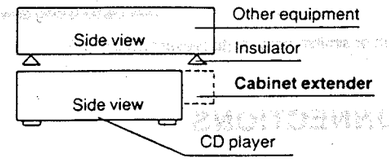

1. Insert the four screws (included) and tighten them lightly.

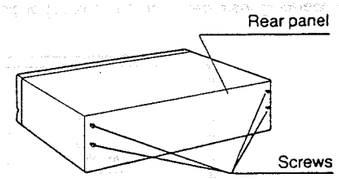

2. Secure the cabinet extenders using the four screws.

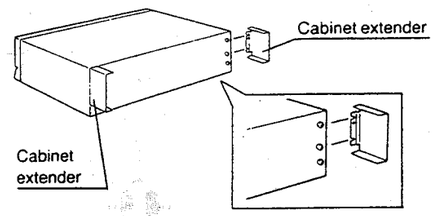

■ ACCESSORIES

AC power supply cord ..... 1 pc.
SFDAC05E03 (E)
RJA0004 (GC)
SJA173 (GN)

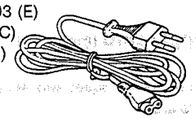

L-type cable ..... 1 pc.
(SJP2257T)

Cabinet extender ..... 2 pcs.
Screws ..... 4 pcs.
(RMA0066)
(XTB3+8JFZ)

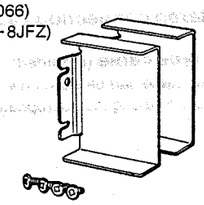

Stereo connection cable ..... 1 pc.
(SJP2249-3)

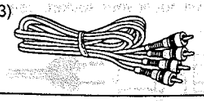

Power plug adaptor ..... 1 pc.
(For (GC) area.)
(SJP9215)

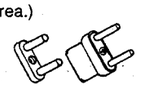

Note: The configuration of the AC power supply cord differs according to area.

HANDLING PRECAUTIONS FOR OPTICAL PICKUP

The laser diode in the optical pickup may break down due to potential difference caused by static electricity of clothes or human body.
So, be careful of electrostatic breakdown during repair of the optical pickup.

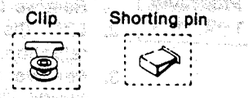

• Handling of optical pickup

1. Do not subject the optical pickup to static electricity as it is extremely sensitive to electrical shock.
2. To prevent the breakdown of the laser diode, an anti-static shorting pin is inserted into the flexible board. (FPC board)
   When removing or connecting the short pin, finish the job in as short time as possible.
3. Take care not to apply excessive stress to the flexible board. (FPC board)
4. Do not turn the variable resistor (laser power adjustment). It has already been adjusted.

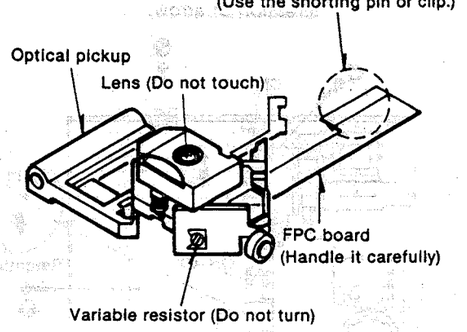

• Grounding for electrostatic breakdown prevention

1 Human body grounding
Use the anti-static wrist strap to discharge the static electricity from your body.
2. Work table grounding
Put a conductive material (sheet) or steel sheet on the area where the optical pickup is placed, and ground the sheet.

Caution:
The static electricity of your clothes will not be grounded through the wrist strap. So, take care not to let your clothes touch the optical pickup.

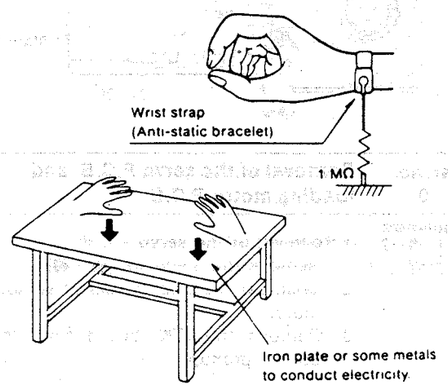

INSTRUCTIONS FOR TRAVERSE OIL (Part No. SZZOL31)

The container contains 6g (approx. 3ml) of oil.
One application (one shaft) uses 0.05ml of oil.

How to Use

(1) Remove the guide shaft in the traverse deck from the optical pickup and clean off any dust from the guide shaft.
(2) Apply one drop of the SZZOL31 to the tip of the guide shaft.
(3) Hold the guide shaft so that its oiled end touches the optical pickup and insert it into the bearing while rotating it slowly.
(4) After securing the guide shaft, move the optical pickup by hand several times to the left and right to distribute the oil on the guide shaft.

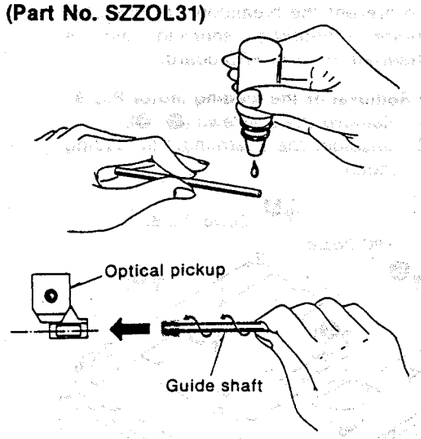

"ATTENTION SERVICER"
Some chassis components may have sharp edges. Be careful when disassembling and servicing.

DISASSEMBLY INSTRUCTIONS

Warning: This product uses a laser diode. Refer to caution statements on page 3.

ACHTUNG:
- Die lasereinheit nicht zerlegen.
- Die lasereinheit darf nur gegen eine vom hersteller spezifizierte einheit ausgetauscht werden.

∗This CD player is equipped with FPC boards, so handle them with care during disassembly and reassembly.

Ref. No. 1	Removal of the top case
Procedure 1	

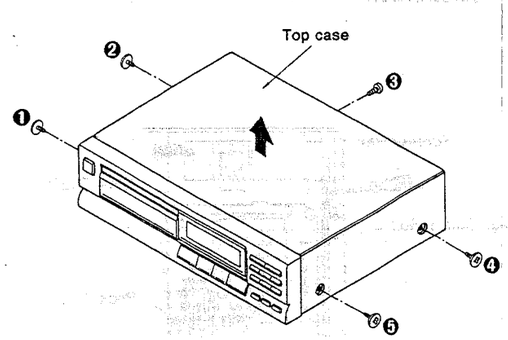

• Remove the 5 screws (❶~❺).

Ref. No. 3	Removal of the operation P.C.B.
Procedure 1→2→3	

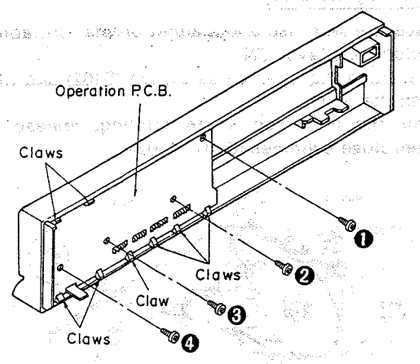

1. Remove the 4 screws (❶~❹).
2. Release the 8 claws.

Ref. No. 2	Removal of the ornament of disc holder and the front panel ass'y
Procedure 1→2	

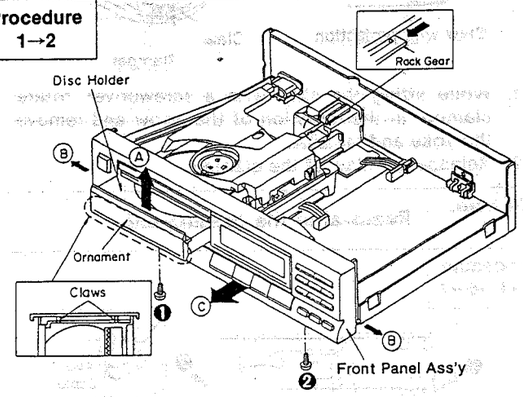

• Removal of the ornament of disc holder:
1. Push the rack gear slowly in the direction of arrow.
2. Release the 2 claws and ornament in the direction of arrow (Ⓐ).

• Removal of the front panel ass'y:
1. Remove the 2 screws (❶, ❷).
2. Slightly pull out the front panel ass'y in the direction of arrow (Ⓑ).
3. Remove the front panel ass'y in the direction of arrow (Ⓒ).

Ref. No. 4	Removal of the disc clamper
Procedure 1→4	

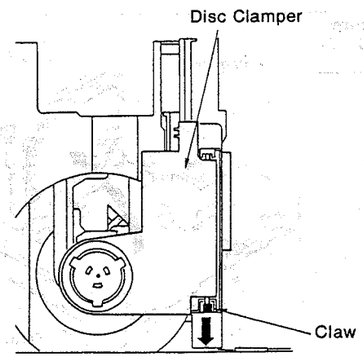

• Push the claw in the direction of the arrow and remove the disc clamper.

Ref. No. 5 — Removal of the yoke, magnet and clamper

Procedure 1→4→5

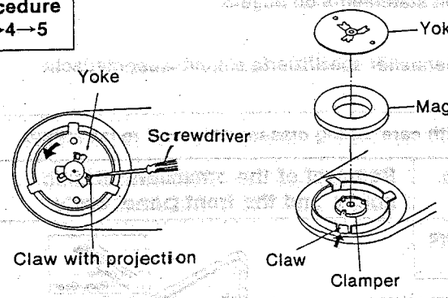

1. While lifting the claw with a screwdriver, rotate clamper in the direction of the arrow and remove the yoke and magnet.
2. Release the claw of the clamper.

Ref. No. 6 — Removal of the disc holder and power switch rod

Procedure 1→4→6

- **Removal of the disc holder:**
1. Push the rack gear slowly in the direction of the arrow until the disc tray comes up.
2. Pull out the disc holder further to remove it.

Note: Pull the lock shaft on the bottom panel to the "FREE" position.

- **Removal of the power switch rod:**
1. Set the power switch to the "OFF" position.
2. Remove the power switch rod by using a screwdriver.

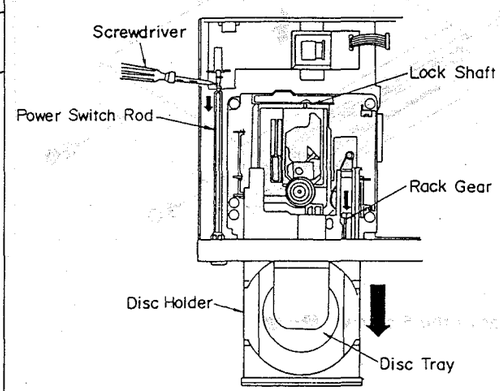

Ref. No. 7 — Removal of the loading unit

Procedure 1→4→6→7

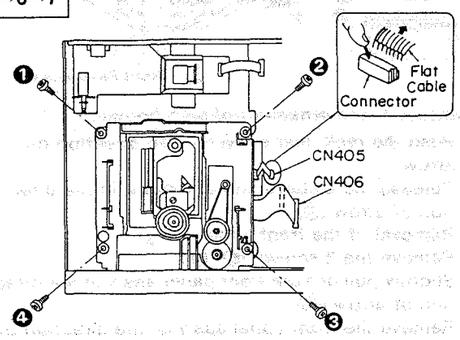

1. Remove the 4 screws (❶~❹).
2. Remove the 2 flat cables (CN405, CN406).

Ref. No. 8 — How to check the servo P.C.B.

Procedure 1→4→6→7→8

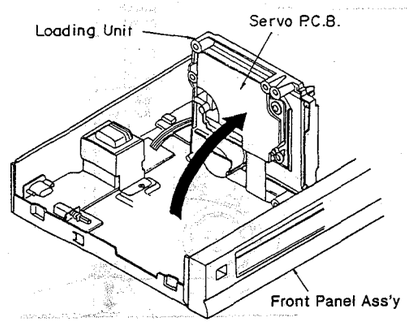

- When checking the soldered surface of the servo P.C.B. and replacing the parts, do as shown.
- Don't remove the 2 flat cables (CN405, CN406).

How to play the disc

1. Place the test disc and magnet on the turntable.
2. Switch the player ON.
3. First push the open/close switch (S102) and next, push the S101.
4. After the test disc starts rotating, release the open/close switches (S101, S102).

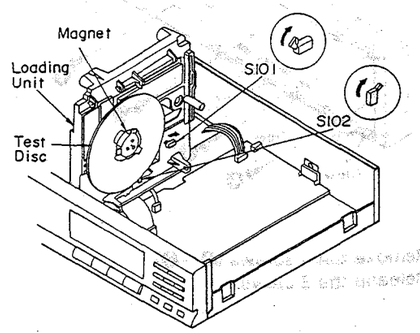

Ref. No. 9 — Removal of the main P.C.B.

Procedure 1→2→3→9

1. Remove the 4 screws (❶~❹).
2. Lift the main P.C.B. off the retention posts on the chassis.
3. Remove the 3 flat cables (CN11, CN405, CN406).
4. Remove the main P.C.B. in the direction of arrow.

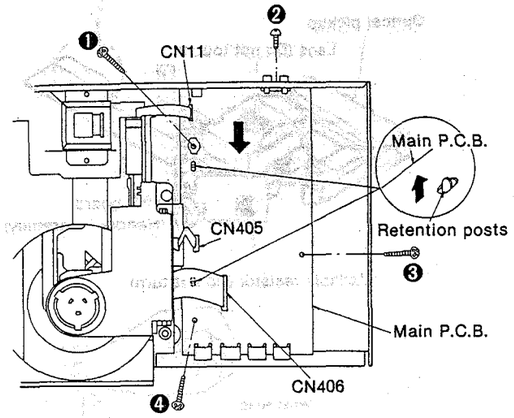

How to check the main P.C.B.

- When checking the soldered surface of the main P.C.B. and replacing the parts, do as shown.
- Don't remove the 2 flat cables (CN405, CN406).

Cautions:
1. Connect the main P.C.B. ground terminal (LINE OUT terminal) to the chassis with a lead wire.
2. Connect the operation P.C.B. ground terminal to the chassis with a lead wire.

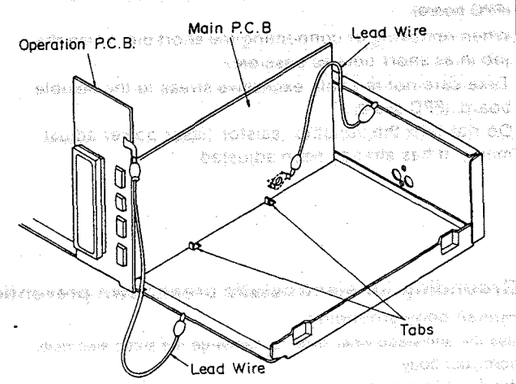

Ref. No. 10 — Removal of the servo P.C.B. and loading motor P.C.B.

Procedure 1→4→6→7→10

- **Removal of the servo P.C.B.**
1. Remove the 3 screws (❶~❸).
2. Unsolder the 2 terminals of spindle motor.
3. Remove the FPC board from the optical pickup.

Caution:
To prevent the breakdown of the laser diode, antistatic shorting pin is inserted into the FPC board.

- **Removal of the loading motor P.C.B.**
1. Remove the 2 screws (❹, ❺).
2. Unsolder the 2 terminals of loading motor.

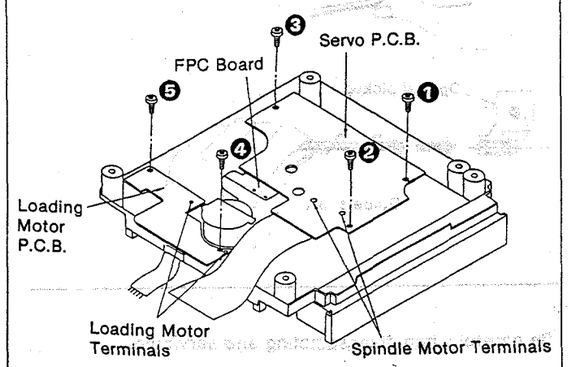

Ref. No. 11 — Removal of the loading motor

Procedure 1→4→6→7→11

1. Remove the drive belt.
2. Remove the 2 screws (❶, ❷).
3. Release the 2 claws.
4. Unsolder the 2 terminals of the lead wire of the loading motor.

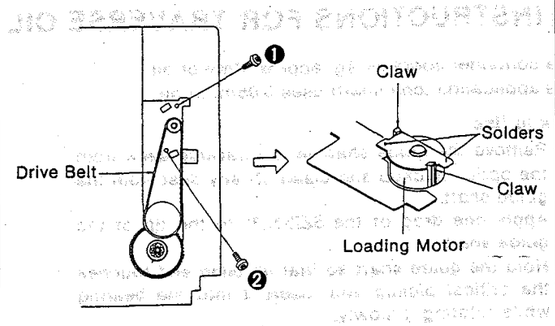

Ref. No. 12	Removal of the optical pickup
Procedure 10→12	Refer to the handling precautions for optical pickup and instructions for traverse oil (See page 6).

1. Remove the 2 screws (❶, ❷).
2. Unsolder the 2 terminals and the 2 screws (❸, ❹).

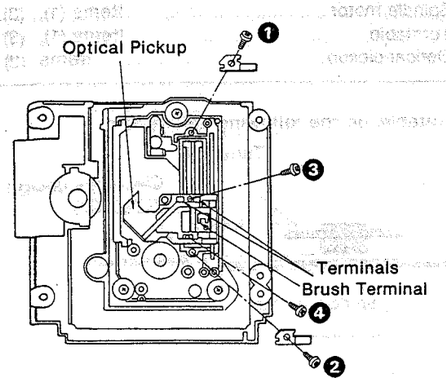

Caution: Take care not to touch the brush terminal.

Ref. No. 13	Removal of the power supply P.C.B.
Procedure 1→2→4→13	1. Remove the 3 screws (❶~❸). 2. Remove the flat cable (CN11).

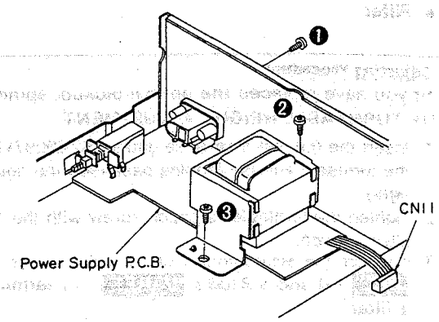

Ref. No. 14	Removal of the spindle motor
Procedure 10→14	1. Loosen the screw (❶) by using a 1.27mm allen wrench and remove the turntable. 2. Remove the 2 screws (❷, ❸).

Caution:
1. Turntable height adjustment is necessary any time the turntable or spindle motor is replaced.
2. The (+) terminal of the spindle motor is indicated by the red mark.

Adjustment of turntable height
1. Insert a 0.9mm clearance gauge (RZZ0297) between the turntable and loading base as shown below.

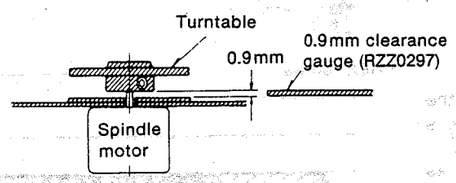

2. Tighten the turntable set-screw by using a 1.27mm allen wrench.

Caution:
Refer to turntable height adjustment (see page 13).

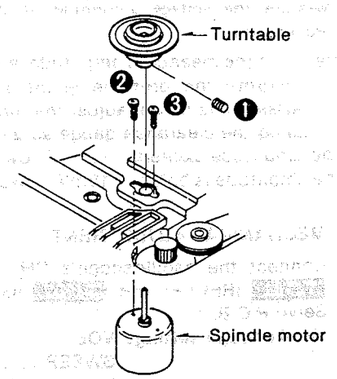

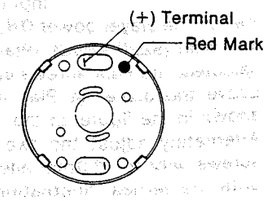

MEASUREMENTS AND ADJUSTMENTS

Caution:
- It is very dangerous to look at or touch the laser beam. (Laser radiation is invisible.)
  With the unit turned "on", laser radiation is emitted from the pickup lens.
  Avoid exposure to the laser beam, especially when performing adjustments.

PREPARATION FOR UNIT

1. Remove the cabinet (see Ref. No. 1 of the disassembly instructions).
2. Remove the disc clamper and magnet (see Ref. No. 4, 5 of the same).
3. Remove the disc holder and power switch rod (see Ref. No. 6 of the same).
4. Place the test disc and magnet on the turntable.
5. Switch the player on.
6. First push the Open/Close switch S102 in the direction of the arrow and then, push switch S101 in the direction of the arrow as shown in the figure.

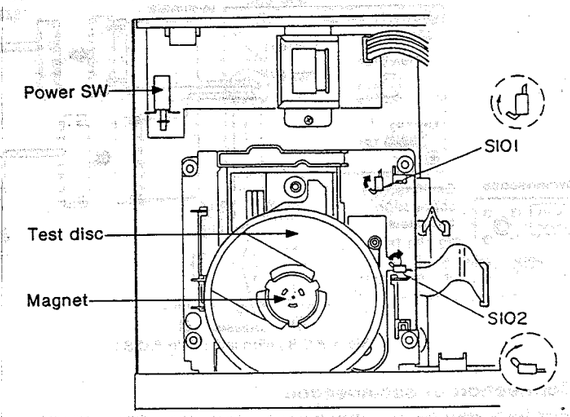

PREPARATION FOR SERVO GAIN ADJUSTER

- **Using the new version of the servo gain adjuster (SZZP1094C-1)**

(For tracking gain, focus gain and tracking balance adjustments.)

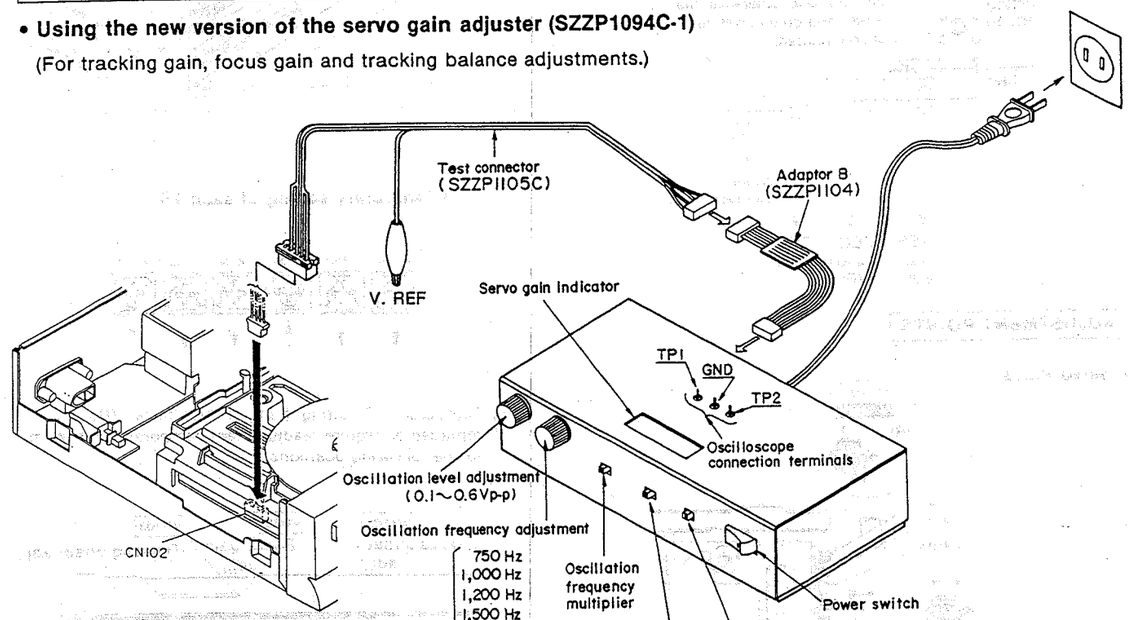

Note: Refer to focus and tracking gain adjustment on page 14.

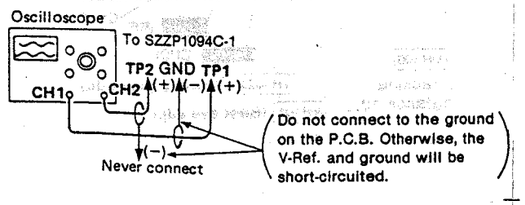

• **Using the former version of the servo gain adjuster (SZZP1017F)**

(For tracking gain, focus gain and tracking balance adjustments.)

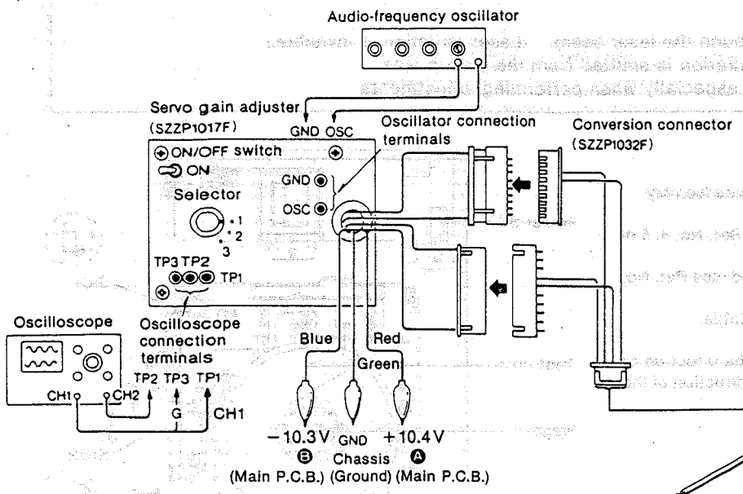

• **Main P.C.B.**

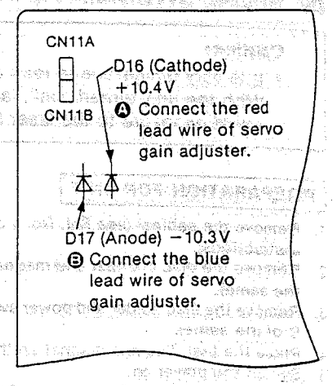

• **Connection of oscilloscope**

(For turntable height, mechanical, best eye, focus offset, tracking offset and tracking balance adjustments.)

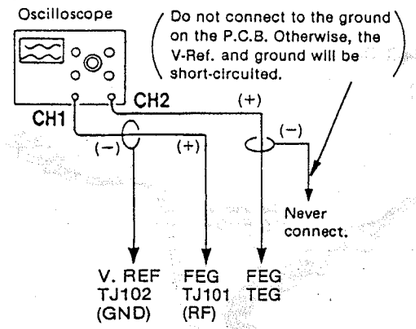

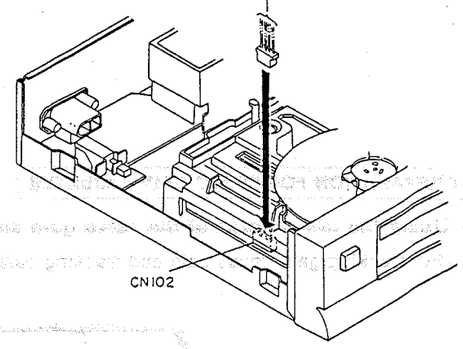

• **Temporary setting of each VR**

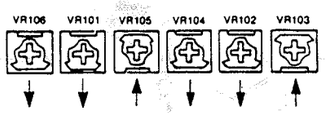

ADJUSTMENT POINTS

• **Servo P.C.B.**

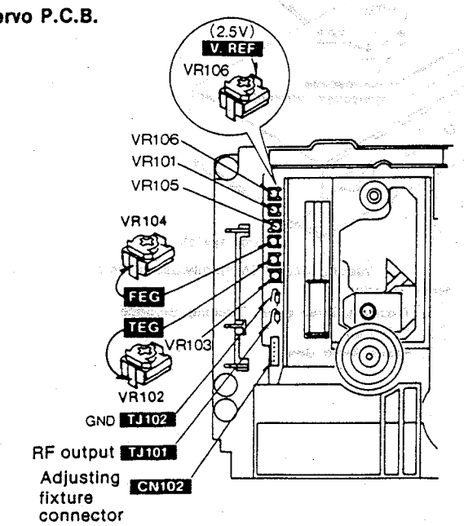

(Temporary VR setting if any of the trimmer VRs are replaced or require readjustment, temporarily set them to the following positions.)

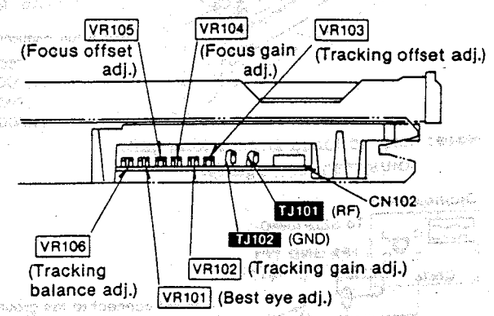

Measuring Instruments and Special Tools

* Servo gain adjuster (SZZP1017F or SZZP1094C-1)
* Test discs
1. Playability test disc (SZZP1054C or SZZP1014F)
2. Uneven test disc (SZZP1056C)
3. Black band test disc (SZZP1057C)
* Musical program disc (ordinary)
* Dual-beam oscilloscope with bandwidth of 30 MHz or better (with EXT trigger and 1 : 1 probe).
* Audio frequency (AF) osillator
* Comversion connector (SZZP1032F)
* Allen wrench (M2.0) (SZZP1101C)
* Allen wrench (M1.27)
* 0.9mm clearance gauge (RZZ0297)
* Filter

• New version of the servo gain adjuster
* Test connector (SZZP1105C)
* Adaptor (SZZP1104C)

• Former version of the servo gain adjuster
* Conversion connector (SZZP1032F)
* Audio-frequency oscillator
* Lock paint (RZZ0L01)

Perform adjustments depend on the part to be replaced according to followings:

(1) Spindle motor ..... Items (1), (3) to (8)
(2) Turntable ..... Items (1), (3) to (8)
(3) Optical pickup..... Items (2) to (8)

Adjusting Procedure

*If you have replaced the optical pickup, spindle motor, or turntable, do the following adjustment:

(1) TURNTABLE HEIGHT ADJUSTMENT

1. Insert the 0.9 mm clearance gauge (RZZ0297) between the turntable and the loading base (see the figure at right).
2. Tighten the turntable retention screw with the 1.27 mm allen wrench.
3. Connect the oscilloscope's CH. 1 probe across VR104's **FEG** (+) and VR106's **V. REF** (−) terminals via a filter.
   (Note: A voltage of 2.5V appears at the V. REF terminal. Take care not to short the player's chassis to the oscilloscope ground.)
   Oscilloscope setting: VOLT ..... 50 mV
   SWEEP ..... 1 ms.
   Input coupling ... DC
4. Adjust oscilloscope's DC zero balance.
5. Switch the player power **ON**, and play the test disc (SZZP1014F or SZZP1054C).
6. Measure the voltage amplitude of the signal on the oscilloscope.

Note 1. If the measured amplitude is within a range of 0±15mV, the turntable height is correct. If it is outside this range, adjust the turntable height by using the clearance gauge as a pry.
If the amplitude exceeds +15mV, lower turntable.
If the amplitude is below −15mV, elevate the turntable.

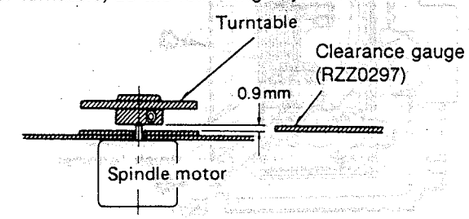

Note 2. If the measured amplitude greatly surpasses or falls short of the range above, set **VR105** at or around the center, then try to adjust the height again. (Then be sure to adjust the focus offset as well.)

• Filter for turntable height adjustment
Resistor: ERDS2TJ103 (10kΩ)
Capacitor: ECQV1H104KV (0.1μF)

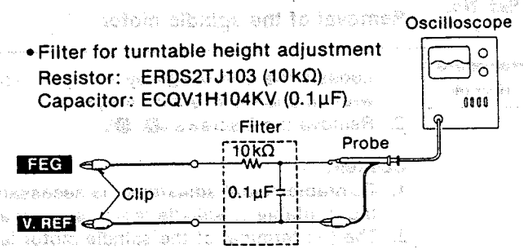

(2) MECHANICAL ADJUSTMENT

1. Connect the oscilloscope's CH. 1 probe across **TJ101** (RF) (+) and **TJ102** (GND) (−) on the Servo P.C.B.
   Oscilloscope setting: VOLT 100mV
   SWEEP ..... 0.5μs.
   Input coupling... AC
2. Switch the player power **ON**, and play track **9** on the test disc (SZZP1056C). (Playing any other track is selected, the HEX screws can not be accessed.)
3. Leave the player in Play mode, and place it as shown in the figure on the right.
4. Alternately adjust the two mechanical adjusting screws wiht the 2.0mm allen wrench (SZZP1101C) until the vertical fluctuation of RF signal is minimized and the eye pattern is most stretched.
5. After completing the adjustment, lock the **mechanical adjustments** with lock paint (RZZ0L01).

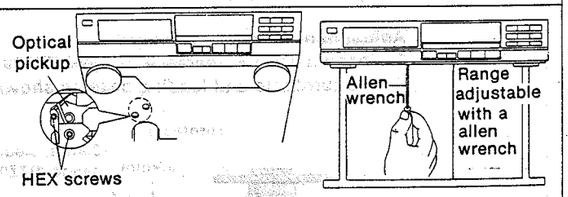

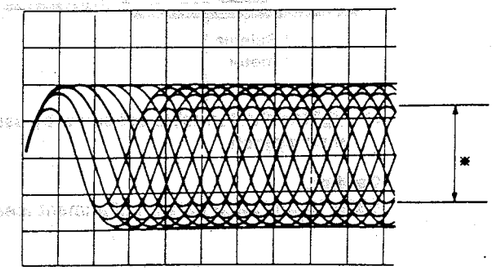

* Most stretched eye pattern.

(3) BEST EYE (PD BALANCE) ADJUSTMENT

1. Connect the oscilloscope's CH. 1 probe across **TJ101** (RF) (+) and **TJ102** (GND) (−) on the Servo P.C.B.
   Oscilloscope setting: VOLT 100mV
   SWEEP 0.5μs
   Input coupling... AC
2. Switch the player power **ON**, and play the 1kHz (track 1) on the test disc (SZZP1054C).
3. Adjust **VR101** until the vertical fluctuation of RF signal is minimized and the eye pattern is most stretched.

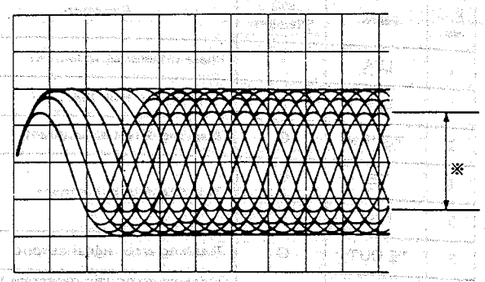

※ Most stretched eye pattern.

(4) FOCUS GAIN ADJUSTMENT

1. Set the "FREQUENCY" dial of the servo gain adjuster's to "**750**" the "RANGE" slector to "×**1.1**" and the "OSC LEVEL" control to "**0.2**" (**825 Hz, 150mVp-p**).
2. Set the "MODE SELECTOR" to position "**2**," and the "TRACKING ON/OFF" switch to "**ON**."
3. Play track **1** (**1kHz**) on the test disc (SZZP1054C).
4. Change the "MODE SELECTOR" switch setting from position "**2**" to "**3**."
5. Adjust **VR104** until the green "SERVO GAIN" indicator LED comes on to indicate "**GOOD**."
6. Set the "MODE SELECTOR" switch from position "**3**" back to "**2**."
   Note: With the new version of the servo gain adjuster, connect TP1, TP2, and TP3 to an oscilloscope, and you will be able to perform all adjustments while monitoring the waveforms on the oscilloscope screen. Adjust **VR104** until the signal amplitude on one channel becomes identical to that on the other, as shown at right. This adjustment procedure also applies with an oscilloscope and audio-frequency oscillator to the former version of the servo gain adjuster.

Oscilloscope setting: VOLT..... 100mV (both channels)
SWEEP ..... 0.5ms.
Input coupling...AC

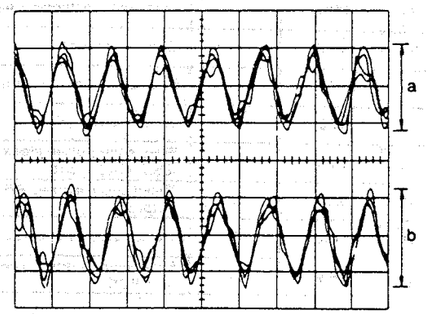

※ Adjust **VR104** until a equals b.

(5) TRACKING GAIN ADJUSTMENT

1. Set the "FREQUENCY" dial of the servo gain adjuster's to "**1,000**" the "RANGE" selector to "×**1.1**" and the "OSC LEVEL" control to "**0.2**" (**1.1kHz, 150mVp-p**).
2. Play track **1** (**1kHz**) on the test disc (SZZP1054C).
3. Set the "MODE SELECTOR" switch from position "**2**" to "**1**."
4. Adjust **VR102** until the green "SERVO GAIN" indicator LED comes on to indicate "**GOOD**."
5. Set the "MODE SELECTOR" switch from position "**1**" back to "**2**."
   Note: When using an oscilloscope for this adjustment, follow the procedure given in the "Note" in (4), "Adjusting Focus Gain" above.

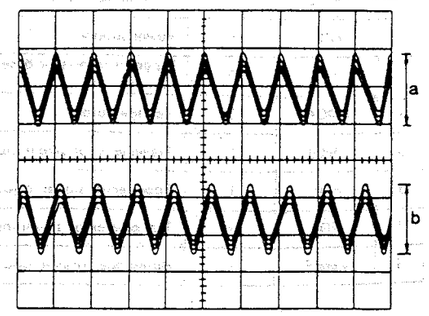

※ Adjust **VR102** until a equals b.

(6) FOCUS OFFSET ADJUSTMENT

Note: Set the "**MODE SELECTOR**" switch of the Servo Gain Adjuster to position "**2**."

1. Connect the oscilloscope's CH. 1 probe across **TJ101** (RF) (+) and **TJ102** (GND) (−) on the digital P.C.B. and its CH. 2 probe (+) to VR104's **FEG** terminal.
   Oscilloscope setting: VOLT..... 100mV (CH.1)
   100 mV (CH. 2)
   SWEEP..... 0.2 ms.
   Input coupling... AC (both CH. 1 and 2)
   Trigger mode .... NORM (trigger CH. 1.)
2. Switch the player power **ON**, and play track **9** on the test disc (SZZP1057C).
3. Trigger the oscilloscope's CH. 1 so that the following waveforms are observed. Adjust **VR105** until the dip in the RF signal envelope on CH. 1 is smooth and the signal amplitude on CH. 2 is minimized, i.e. when amplitude A equals amplitude B.

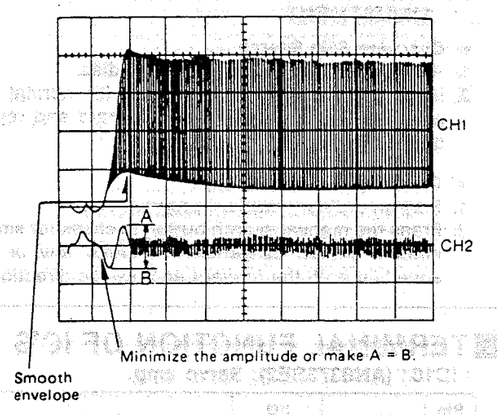

(7) TRACKING OFFSET ADJUSTMENT

Note: Set the "**MODE SELECTOR**" switch of the Servo Gain Adjuster to position "**2**."

1. Connect the oscilloscope's CH. 1 probe across **TJ101** (RF) (+) and **TJ102** (GND) (−) on the digital P.C.B. and its CH. 2 probe (+) to VR102's **TEG** terminal.
   Oscilloscope setting: VOLT..... 100mV (CH. 1)
   100mV (CH. 2)
   SWEEP..... 0.2 ms.
   Input coupling.. AC (both CH. 1 and 2)
   Trigger mode... NORM (trigger CH. 1.)
2. Switch the player power **ON**, and play track **9** on the test disc (SZZP1057C).
3. Trigger the oscilloscope's CH. 1 so that the following waveforms are observed. Adjust **VR103** until the dip in the RF signal envelope on CH. 1 is smooth and the signal amplitude on CH. 2 is minimized, i.e. when amplitude A equals amplitude B.
   (TEG) (+).

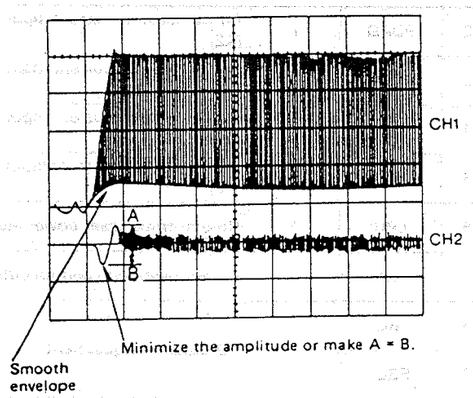

(8) TRACKING BALANCE ADJUSTMENT

1. Set the "FREQUENCY" dial of the servo gain adjuster's to "**1,000**" th "RANGE" selector to "×**1.1**" and the "OSC LEVEL" control to "**0.6**" (**1.1kHz, 600mVp-p**).
2. Connect the hot lead of the oscilloscope's CH. 1 probe to **TJ101** (RF)(+) and the cold lead to **TJ102** (GND) (−).
   ＊ Connect the hot lead of the oscilloscope's CH. 2 probe to TP1 on the servo gain adjuster.
   Oscilloscope setting: VOLT..... 100mV (CH. 1)
   200mV (CH. 2)
   SWEEP ..... 0.1ms.
   Input coupling..... AC (both CH. 1 and CH. 2)
   Trigger mode ..... NORM (trigger CH. 2)
3. Play track **1** (**1kHz**) on the test disc (SZZP1054C).
4. Set the "MODE SELECTOR" switch of the servo gain adjuster to position "**1**."
5. The waveform as shown at right will appear on the oscilloscope. Adjust **VR106** until the envelope amplitude indicated by the asterisk is minimized uniformly.

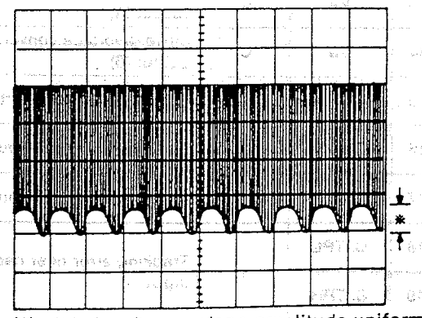

※ Minimize the envelope amplitude uniformly.

(9) CHECK OF PLAY OPERATION AFTER ADJUSTMENT

*** Checking Skip Search**

1. Play an ordinary musical program disc.
2. Press the skip button to check for normal skip search operation (in both the forward and reverse directions).

*** Checking Manual Search**

1. Play an ordinary musical program disc.
2. Press the manual search button to check for smooth manual search operations at either low or high speed (in both the forward and reverse directions).

*** Checking playability**

1. Play the 0.7 mm black dot and the 0.7 mm wedge on the playability test disc (SZZP1054C) and verify that no sound skip or noise occurs.
2. Play the middle tracks of the uneven test disc (SZZP1056C) and verify that no sound skip or noise occurs.

■ TERMINAL FUNCTION OF IC'S

• IC101 (AN8373SE2): Servo amp.

Pin No.	Mark	I/O Division	Function
1	AMP1	I	RF signal input (X30 amp.)
2	PDAD	I	Photo detector current input (A2)
3	PDA	I	Photo detector current input (A1)
4	PDBD	I	Photo detector current input (A4)
5	PDB	I	Photo detector current input (A3)
6	LPD	I	Non-inverting laser power input
7	LD	O	Laser power auto control output
8	FBL1	I	PD balance adjustment
9	FBL2	I	
10	TBL1	I	Tracking balance adjustment
11	TBL2	I	
12	FOOFS	I	Focus offset adjustment
13	IVA	O	Current/voltage conversion output (A)
14	IVB	O	Current/voltage conversion output (B)
15	FE	O	Focus gain adjustment output
16	FPI	I	Focus error signal input
17	TPI	I	Tracking error signal input
18	C. TPL	I	Tracking error filter capacitor input
19	C. TPH		
20	C. FPL	I	Focus error filter capacitor input
21	C. FPH		
22	TPO	O	Tracking error signal output

Pin No.	Mark	I/O Division	Function
23	FPO	O	Focus error signal output
24	FGC	I	Focus gain up signal input (Not used, connected to GND)
25	TGC	I	Tracking gain up signal input (Not used, connected to GND)
26	GD	I	Focus/Tracking down signal input (Not used, connected to GND)
27	PTO	O	Position detecting amp. output
28	PTI	I	Position detecting amp. input
29	PBO	O	Position detecting buffer output
30	POT	I	Position detecting buffer input
31	BDO	O	Dropout detection output
32	$\overline{\text{RFDET}}$	O	RF detection signal output
33	SDO	O	Dropout detection pulse output
34	C. SBDO	I	Dropout detecting capacitor input
35	ARF	O	RF signal output
36	C. AGC	I	AGC detecting capacitor input
37	VCC	I	Power supply
38	LDON	I	Laser power control input
39	RF IN	I	RF signal input
40	AMPO	O	RF signal output
41	VREF	O	Reference voltage output
42	GND	–	Ground terminal

• IC102 (AN8374SE2): Servo processor

Pin No.	Mark	I/O Division	Function
1	LSA	I	Phase difference input (A)
2	LSB	I	Phase difference input (B)
3	TEOFS	O	Tracking offset adjustment
4	TE	O	Tracking gain adjustment
5	TEG	I	
6	TE OUT	O	Tracking error signal output
7	TE BPF	I	Tracking error gain detecting filter (Not used, open)
8	FEG	I	Focus gain adjustment
9	FE OUT	O	Focus error signal output
10	CLW	O	Triangular wave oscillator capacitor output
11	VREF	I	Reference voltage input
12	ARF	I	RF signal input
13	CDSL	I	Data slice filter capacitor input
14	FPC	I	Frequency difference signal input
15	GND	–	Ground terminal
16	C. PLL	I	PLL loop filter constant
17	VSS	–	Ground terminal
18	CLK	I	Frequency pull-in clock signal (88.2 kHz) input
19	SRF	O	Sliced and digitized RF signal output
20	PCK	O	Clock output extracted from SRF
21	EFM	O	EFM signal output synchronous with PCK

Pin No.	Mark	I/O Division	Function
22	VDD	I	Power supply
23	SPCNT	O	Track crossing speed control output output (Not used, open)
24	SENSE	O	Selector output (track crossing state)
25	TRV	O	Traverse servo control output
26	$\overline{\text{FLOCK}}$	O	Focus lock signal output
27	KICK	O	Track kick signal output
28	LDON	O	Laser power control output
29	VDET	O	Focus/tracking gain up output (Not used, open)
30	CNT1	I	Control input (FOON: Focus Servo On signal)
31	CNT2	I	Control input (TRON: Tracking Servo On signal)
32	CNT3	I	Control input (KICKF: Kick Direction (Forward) command)
33	CNT4	I	Control input (KICKR: KICK Direction (Backward) command)
34	TRVF	I	Traverse forward command signal
35	TRVR	I	Traverse backward command signal
36	$\overline{\text{RFDET}}$	I	RF detection signal input
37	BDO	I	Dropout detection input
38	VCC	I	Power supply
39	TVPO	O	Traverse position detecting resistor/capacitor inputs
40	TVPI	I	
41	BROUT	O	Tracking drive control output
42	BRIN	I	Tracking error signal input

• IC103 (AN3877N): BTL drive

Pin No.	Mark	I/O Division	Function
1	PVCC	I	Drive power supply
2	VCC	I	Power supply
3	TB	O	External transistor base driving output
4	VMON	O	Voltage output
5	TVDI	I	Traverse error signal input
6	FDI	I	Focus error signal input
7	TDI	I	Tracking error signal input
8	VREF	I	Reference voltage input

Pin No.	Mark	I/O Division	Function
9	TD–	O	Inverting output of tracking driver
10	TD+	O	Non-inverting output of tracking driver
11	FD–	O	Inverting output of focus driver
12	FD+	O	Non-inverting output of focus driver
13	TVD–	O	Inverting output of traverse driver
14	TVD+	O	Non-inverting output of traverse driver
15	$\overline{\text{RESET}}$	O	Reset signal output
16	PC	I	PC input (connect to GND.)

• IC301 (MN6625): Digital signal processor

Pin No.	Mark	I/O Division	Function
1	BYTCK	O	Serial data byte clock (Not used, open)
2	FCLK	O	Crystal frame clock (7.35kHz) (Not used, open)
3	DEMPH	O	De-emphasis ON signal (de-emphasis ON at "H")
4	SRDATA	O	Serial data output (MSB first)
5	SCK	O	Serial bit clock output
6	LRCK	O	LR discrimination signal output
7	WDCK	O	Serial data output word clock
8	LDG	O	L channel deglitch signal (Not used, open)
9	RDG	O	R channel deglitch signal (Not used, open)
10	IPFLAG	O	Interpolation flag (interpolation at "H")
11	FLAG	O	Error flag terminal
12	XCK	O	Clock (16.9344MHz) output (Not used, open)
13	TEST	I	Test mode selection (Not used, connected to power supply.)
14	TX	O	Digital signal output (Not used, open)
15	SLEEP	I	Mode selector ("L": normal, "H": SLEEP mode) (Not used, connected to GND)
16	CSEL	I	Test terminal ("L": normal) (Not used, connected to GND)
17	X1	I	Clock input (16.9344MHz)
18	X2	O	Clock output (16.9344MHz) (Not used, open)
19	VSS	—	GND terminal
20	BLKCK	O	Sub-code block (Q data) clock (75Hz)
21	$\overline{\text{CLDCK}}$	O	Sub-code frame (Q data) clock (7.35kHz)
22	$\overline{\text{SUBQ}}$	O	Sub-code (Q data) output
23	$\overline{\text{RST}}$	I	Reset signal input (reset at "L")
24	MLD	I	Command load signal input
25	MCLK	I	Command clock signal input
26	MDATA	I	Command data input
27	DMUTE	I	Muting control
28	$\overline{\text{TRON}}$	I	Tracking servo ON signal (tracking servo ON at "L")
29	STAT	O	Processing condition (CRC, CUE, CLVS, TT STOP, FCLV)
30	SUBC	O	Sub-code serial output data (Not used, open)
31	SBCK	I	Clock for sub-code serial output (Not used, open)
32	SMCK	O	Clock output (4.2336MHz)
33	VDD	I	Power supply
34	MEMP	I	Emphasis signal input (Not used, open)
35	FG	I	Spindle motor FG signal input (Not used, open)
36	PC	O	Spindle motor ON signal (ON at "L")
37	EC	O	Spindle motor drive signal
38	RESY	O	Resynchronizing signal (Not used, open)
39	DO	I	Drop-out signal (Drop-out at "H")
40	SRF	I	EFM signal input (DSL)
41	EFM	I	EFM signal input (PLL)
42	PCK	I	PLL extract clock input (4.3218MHz)
43	FPC	O	PLL frequency comparision signal
44 ~ 51	D7 ~ D0	I/O	16K RAM data input/output
52	RAM/OE	O	16K RAM $\overline{\text{OE}}$ signal
53	RAM/WE	O	16K RAM $\overline{\text{WE}}$ signal
54 ~ 64	RAM/A0 ~ RAM/A10	O	16K RAM address signal (RAMA0: LSB, RAMA10: MSB)

• IC401 (MN15283PKG): System control & FL drive

Pin No.	Mark	I/O Division	Function
1	CLOSE SW	I	Disc holder "Close" detection
2	DECK IN	I	Synchro edit control input (Not used, open)
3	NC	—	Not connected
4			
5	RST	I	Reset signal input
6	BLKCK	I	Sub-code block (Q data) clock input (75Hz)
7 ~ 10	P50 ~ P53	I	Key scan data signal input
11	CLDCK	I	Sub-code block (Q data) clock input (7.35kHz)
12	SUBQ	I	Sub code (Q data) input
13	CLOSE	O	Loading motor "Close" command
14	OPEN	O	Loading motor "Open" command
15	TRVR	O	Traverse "Reverse" command signal
16	TRVF	O	Traverse "Forward" command signal
17	CNT4	O	Optical servo IC control signal (KIKCR: Kick direction [Reverse] command)
18	CNT3	O	Optical servo IC control signal (KICKF: Kick direction [Forward] command)
19	CNT2	O	Optical servo IC control signal ($\overline{\text{TRON}}$: Tracking servo)
20	CNT1	O	Optical servo IC control signal ($\overline{\text{FOON}}$: Focus servo)
21	STAT	I	Processing status input from signal processor LSI
22	NC	—	Not connected
23	FLOCK	I	Optical servo condition (focus) input
24	SENSE	I	Optical servo condition (Track cross) input
25	NC	—	Not connected
26	SYNC	O	Synchro edit control output (Not used, open)
27	DAC	O	(Not used, open)
28	VPP	I	FL drive power supply
29 ~ 44	D0 ~ DF	O	FL glid signal and key scan data signal
45 ~ 53	S8 ~ S0	O	FL anode signal
54	VDD	I	Power supply
55	OSC2	I	Clock input (4.2336MHz)
56	OSC1		
57	VSS	—	GND terminal
58	XO	—	Clock terminal (Not used, open)
59	XI	I	Optical servo condition (Track cross) input
60	MUTE	O	Muting control output
61	MDATA	O	Command data output
62	MCLK	O	Command clock output
63	MLD	O	Command load output
64	OPEN SW	I	Disc holder "Open" detection

• IC402 (MN1550PKH): Remote control signal processor

Pin No.	Mark	I/O Division	Function
1	VDD	I	Power supply
2	OSC	I	Clock input
3	P23	—	(Not used, open)
4	P22	—	(Not used, open)
5	RST	I	Reset signal input
6	P21	—	(Not used, open)
7	P20	I	Remote control signal input
8	IRQ	I	Program enable/de-enable control
9	P31	O	(Not used, open)
10 ~ 13	P10 ~ P13	I	Key scan data signal input
14 ~ 17	P00 ~ P03		
18	VSS	—	GND terminal

• IC801 (SM5807ESET): Digital filter

Pin No.	Mark	I/O Division	Function
1	XT	I	Osicllator input
2	$\overline{XT}$	O	Oscillator output (not used, open)
3	$\overline{CKSL}$	I	$\overline{CKSL}$ = H : External input of 16.9344 MHz or 17.2872 MHz to XT $\overline{CKSL}$ = L : External input of 8.4672 MHz or 8.6436 MHz to XT
4	CKO	O	Clock output (not used, open)
5	LRCI	I	44.1 kHz synchronization clock input
6	DIN	I	Serial data input
7	BCKI	I	Serial data bit clock input
8	VSS	I	Digital ground terminal

Pin No.	Mark	I/O Division	Function
9	$\overline{SCSL}$	I	$\overline{SCSL}$ = H : System clock = 192 fs $\overline{SCSL}$ = L : System clock = 196 fs (fs = sampling frequency)
10	DGR	O	R ch deglitch signal (176.4 kHz) (not used, open)
11	DGL	O	L ch deglitch signal (176.4 kHz) (not used, open)
12	D OUT	O	Serial data output
13	WDCO	O	Output control clock (352.8 kHz)
14	$\overline{LRCO}$	O	Output control clock (176.4 kHz)
15	BCKO	O	Serial bit clock output (8.4672 MHz or 8.6436 MHz)
16	VDD	I	Power supply terminal (connected to +4.8V)

• IC802 (UPD6376GSE1): D/A Converter

Pin No.	Mark	I/O Division	Function
1	NC	—	Not connected
2	D. GND	I	Ground terminal
3	D. VDD	I	Power supply (connected to +4.8V)
4			
5	A. GND	I	Ground terminal
6	R. OUT	O	R ch signal output
7	A. VDD	I	Power supply (connected to +4.8V)
8			
9	R. REF	O	R ch reference voltage capacitor output

Pin No.	Mark	I/O Division	Function
10	L. REF	O	L ch reference voltage capacitor output
11	L. OUT	O	L ch signal output
12	A. GND	I	Ground terminal
13	LRCK	I	L/R clock signal input
14	LRSEL	I	L/R clock selector (Not used, connected to power supply)
15	SI	I	Serial data signal input
16	SLK	I	Serial bit clock input

BLOCK DIAGRAM

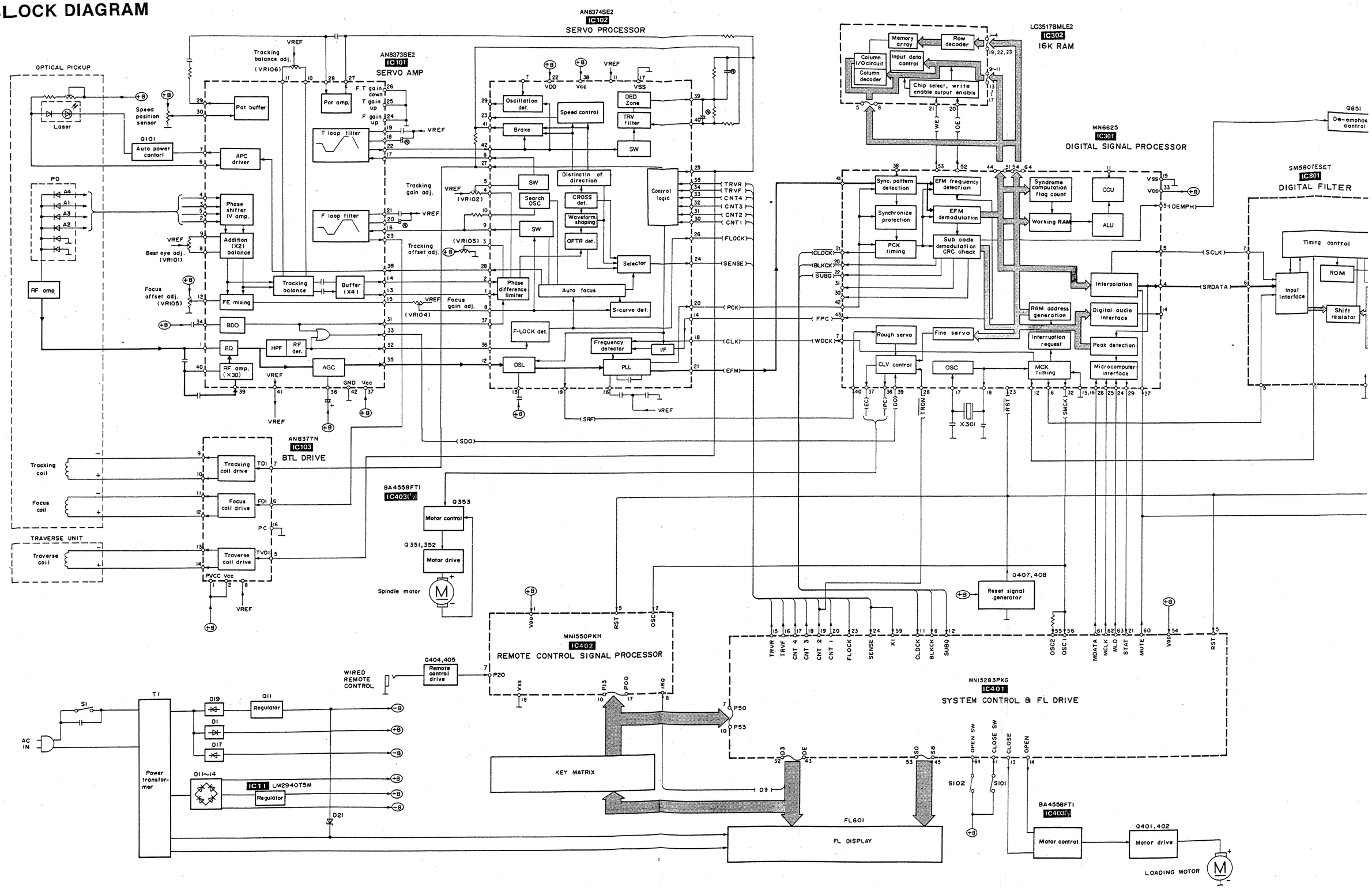

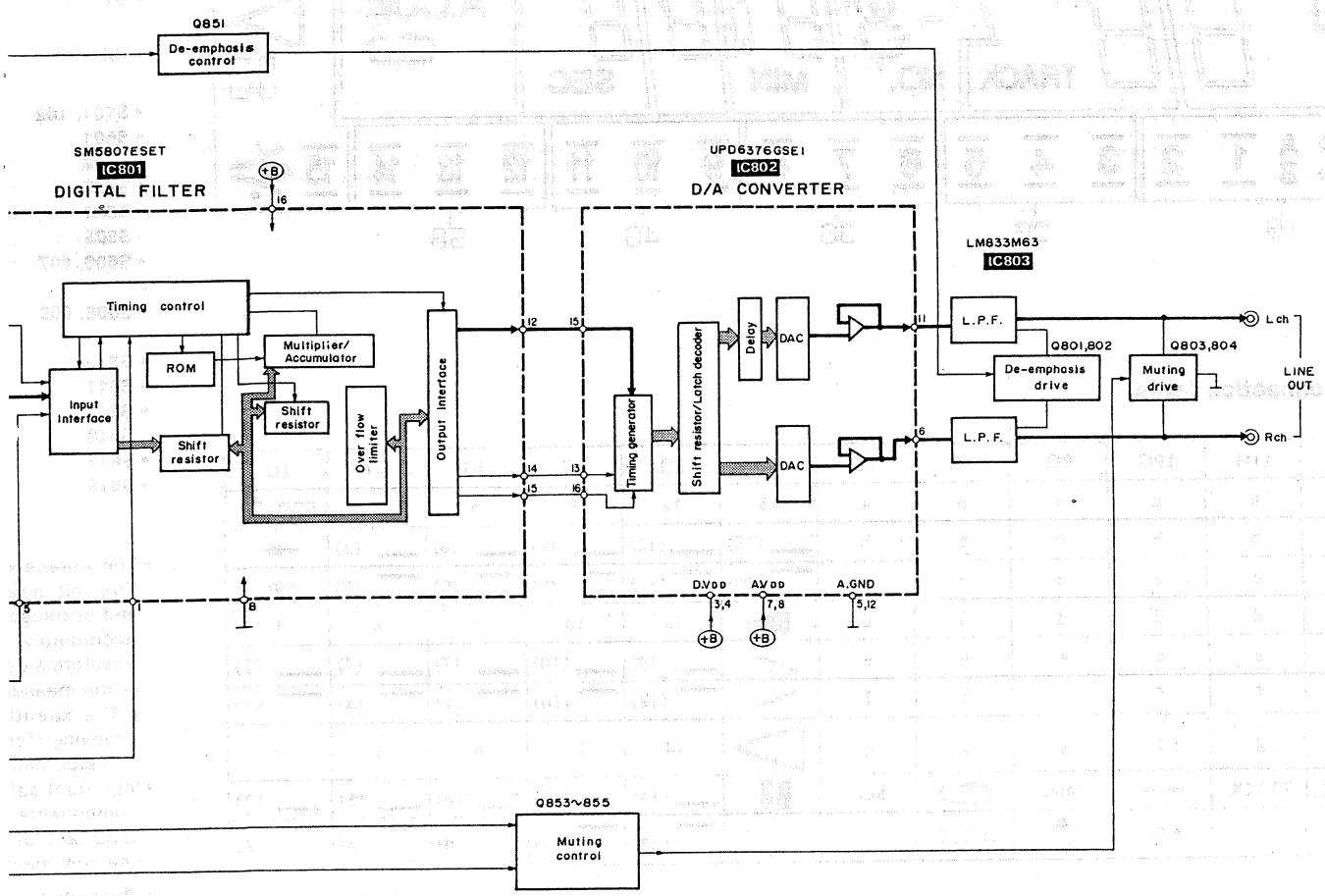

Note:

→ Audio signal

INTERNAL CONNECTION OF FL

• Grid connection diagram

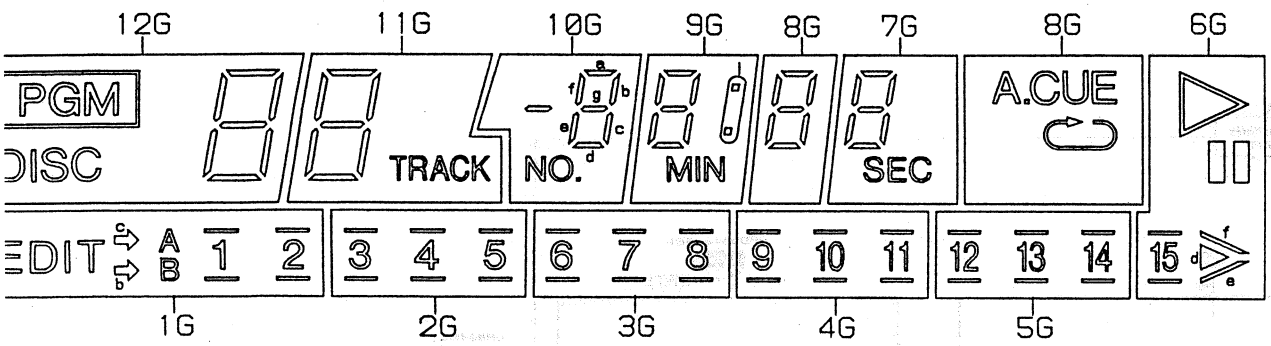

• Anode connection table

	12G	11G	10G	9G	8G	7G	6G	5G	4G	3G	2G	1G
a	a	a	a	a	a	a	15	12	9	6	3	EDIT A B
b	b	b	b	b	b	b	— (15)	— (12)	— (9)	— (6)	— (3)	→
c	c	c	c	c	c	c	— (15)	— (12)	— (9)	— (6)	— (3)	→
d	d	d	d	d	d	d	▶	13	10	7	4	1
e	e	e	e	e	e	e	/	— (13)	— (10)	— (7)	— (4)	— (1)
f	f	f	f	f	f	f	\	— (13)	— (10)	— (7)	— (4)	— (1)
g	g	g	g	g	g	g	▷	14	11	8	5	2
h	PGM	TRACK	—	MIN	↻	SEC	▮▮	— (14)	— (11)	— (8)	— (5)	— (2)
i	DISC	-	NO.	■ ■	A.CUE	-	-	— (14)	— (11)	— (8)	— (5)	— (2)

• Pin connection

PIN NO.	36	35	34	33	32	31	30	29	28	27	26	25	24	23	22	21	20	19	18	17	16	15	14	13	12	11	10	9	8	7	6	5	4	3	2	1
CONNECTION	F2	F2	NP	a	NP	NP	b	c	d	e	f	g	h	i	12G	11G	NP	NP	NP	NP	10G	9G	8G	7G	6G	5G	4G	3G	2G	NP	NP	NP	1G	NP	F1	F1

Note 1.)NP·····No pin.
2.)F1,F2·····Filament
3.)1G~12G····Grid.

■ SCHEMA

(Parts list o

(This schematic
development of

Notes:

- **S1** : Pow pos
- **S2** : Volt (110
- **S101, 102** : Disc
- **S601** : Disc
- **S602** : Stop
- **S603** : Rep
- **S604** : Pau
- **S605** : Play
- **S606, 607** : Sea [S60
- **S608, 609** : Skip [S60
- **S610** : Tim
- **S611** : Prog
- **S612** : Clea
- **S613** : to
- **S614** : Tap
- **S615** : Edit

- The voltage value this unit measure and oscilloscope Accordingly, there waveforms depen or the measuring
  * The parenthesiz playing (Test dis in stop mode.
- Important safety r Components ident important for safet use only manufact
- The supply part nu parts list.

Part No.	O
IC11	LI
IC403	B

- ——— / — — — voltage lines.
- ⇒ : audio

Caution!
IC and LSI are sensi
Secondary trouble c
- Cover the parts bo
- Ground the solderi
- Put a conductive r
- Do not touch the p

■ SCHEMATIC DIAGRAM

(Parts list on page 43~46)

(This schematic diagram may be modified at any time with development of new technology.)

Notes:

- **S1** : Power switch (POWER ▮ OFF ▬ ON) in "**on**" position.
- **S2** : Voltage selector switch in "**240V**" position. (110V ↔ 127V ↔ 220V ↔ 240V) [For (GC) only]
- **S101, 102** : Disc holder open/close detection switches.
- **S601** : Disc holder open/close (▲ OPEN/CLOSE) switch.
- **S602** : Stop (■ STOP) switch.
- **S603** : Repeat (REPEAT) switch.
- **S604** : Pause (▮▮ PAUSE) switch.
- **S605** : Play (▶ PLAY) switch.
- **S606, 607** : Search (◀◀ SEARCH ▶▶) switches. [S606: ◀◀ (B), S607: ▶▶ (F)]
- **S608, 609** : Skip (|◀◀ SKIP ▶▶|) switches. [S608: |◀◀ (B), S609: ▶▶| (F)]
- **S610** : Time mode select (TIME MODE) switch.
- **S611** : Program (PROGRAM) switch.
- **S612** : Clear (CLEAR) switch.
- **S613** : Auto cue (AUTO CUE) switch.
- **S614** : Tape side select (TAPE SIDE A/B) switch.
- **S615** : Edit tape length (EDIT TAPE LENGTH) switch.

- The voltage value and waveforms are the reference voltage of this unit measured by DC electronic voltmeter (high impedance) and oscilloscope on the basis of chassis.
  Accordingly, there may arise some error in voltage values and waveforms depending upon the internal impedance of the tester or the measuring unit.
  ∗ The parenthesized are the values of voltage generated during playing (Test disc 1kHz, L+R, 0dB), others are voltage values in stop mode.
- Important safety notice:
  Components identified by ⚠ mark have special characteristics important for safety. When replacing any of these components, use only manufacturer's specified parts.
- The supply part number is described alone in the replacement parts list.

Part No.	Original Part No.	Supply Part No.
IC11	LM2940T5M	LM2940T5
IC403	BA4558FT1	SVIBA4558F

- ——— / – – – – Positive voltage lines and negative voltage lines.
- ⋯⋯ : audio signal lines.

Caution!

IC and LSI are sensitive to static electricity.
Secondary trouble can be prevented by taking care during repair.

- Cover the parts boxes made of plastics with aluminum foil.
- Ground the soldering iron.
- Put a conductive mat on the work table.
- Do not touch the pins of IC or LSI with fingers directly.

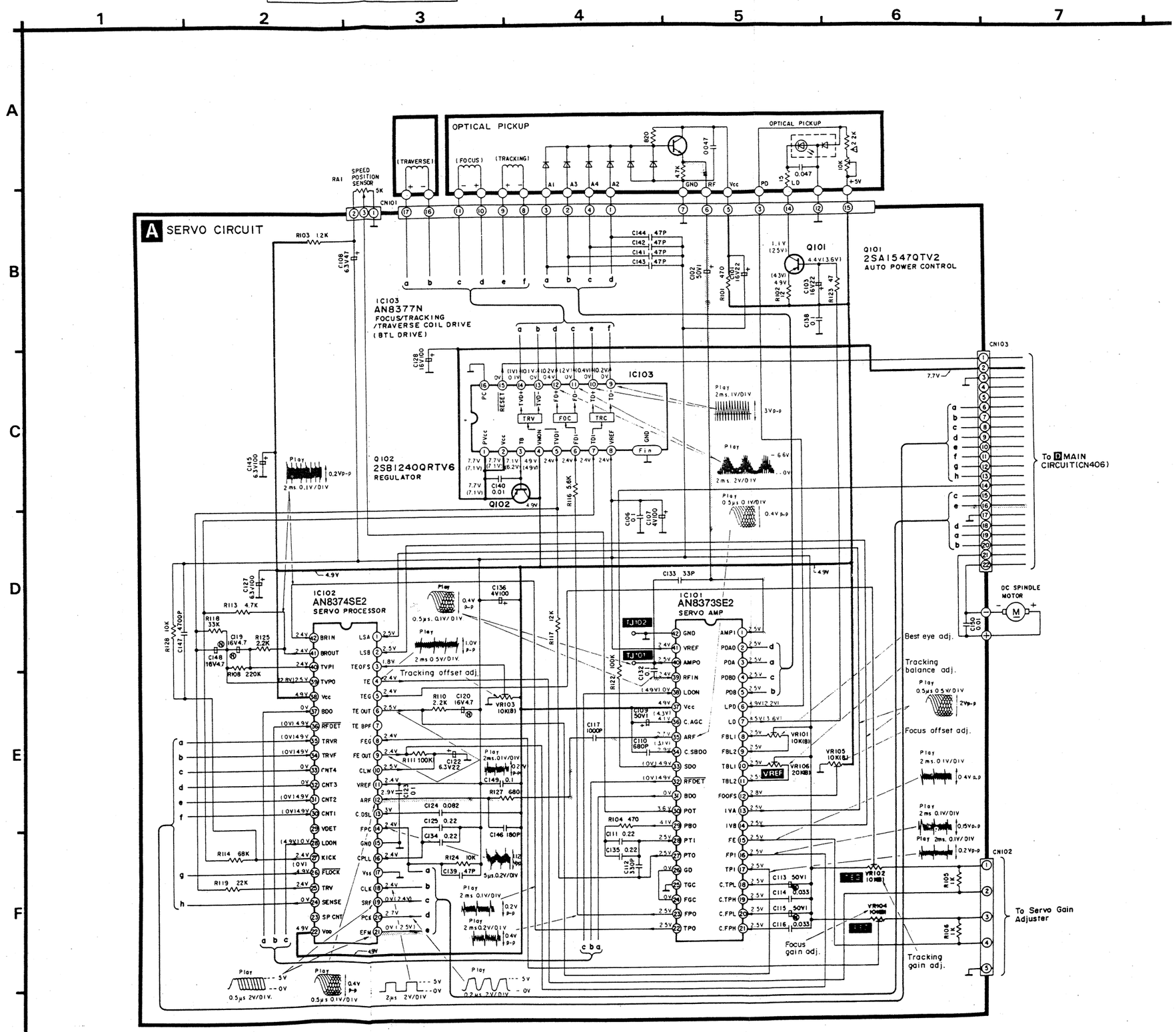

PRINTED CIRCUIT BOARDS

A SERVO P.C.B.

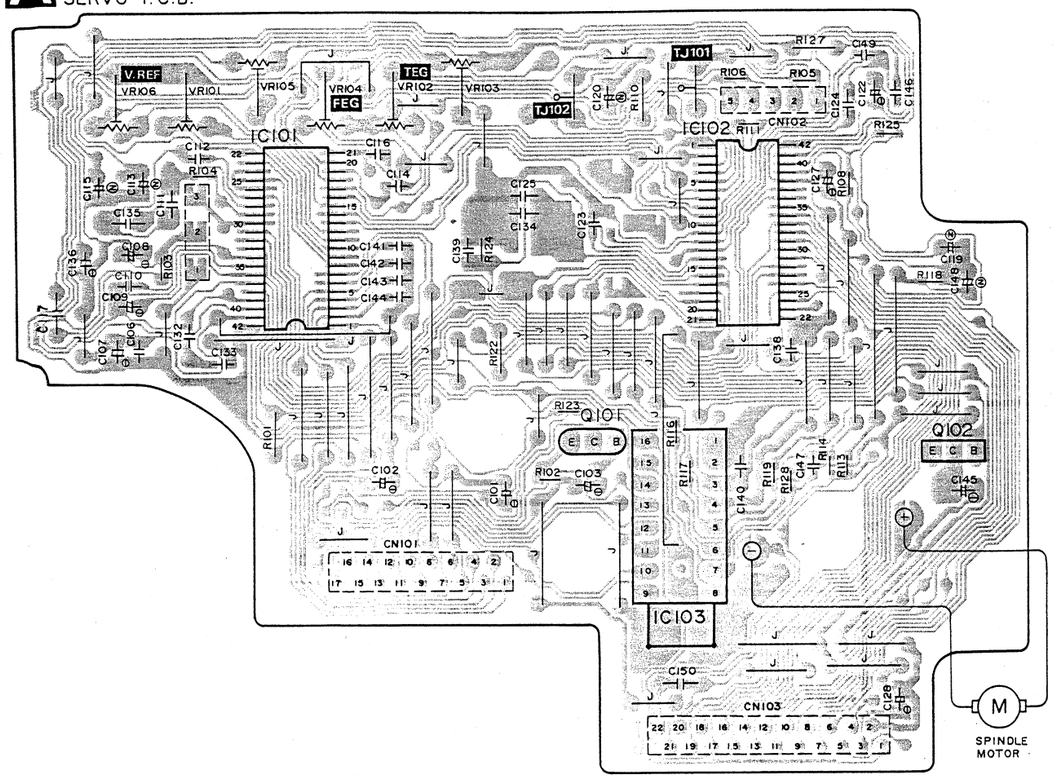

D MAIN P.C.B.

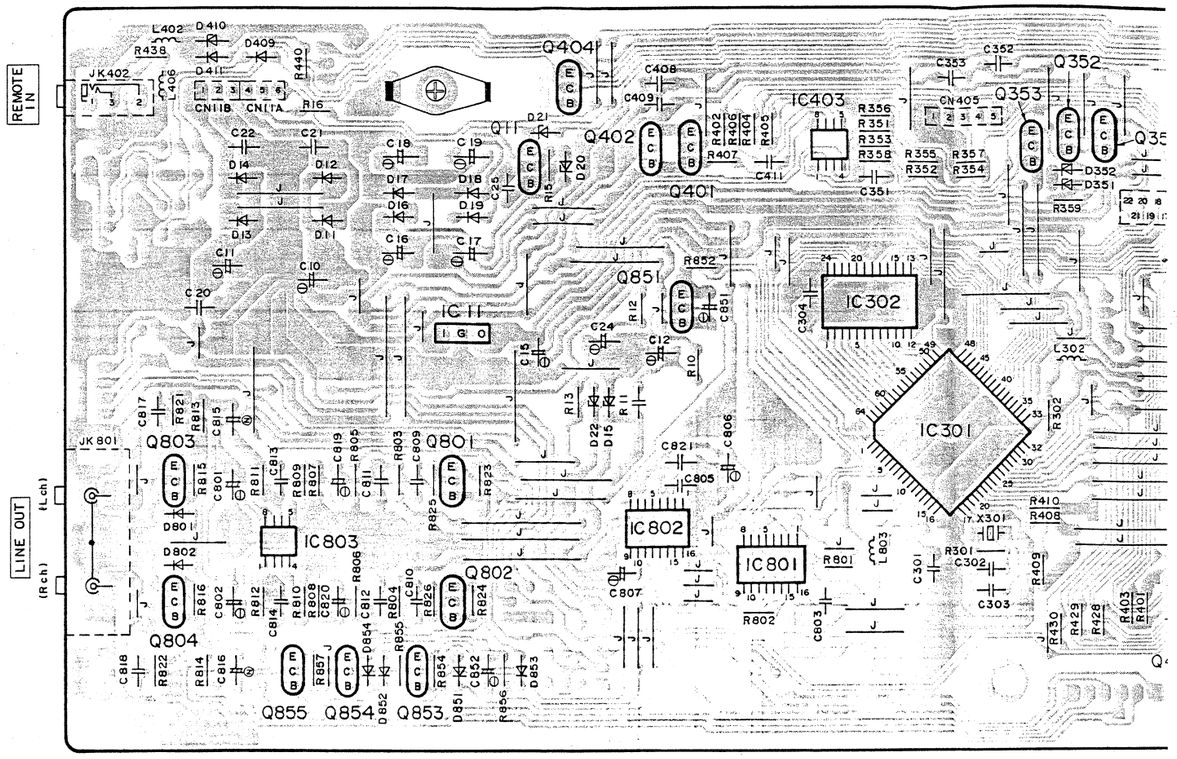

C MOTOR/SWITCH P.C.B.

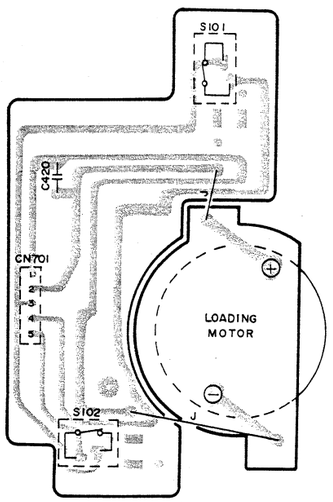

B OPERATION P.C.B.

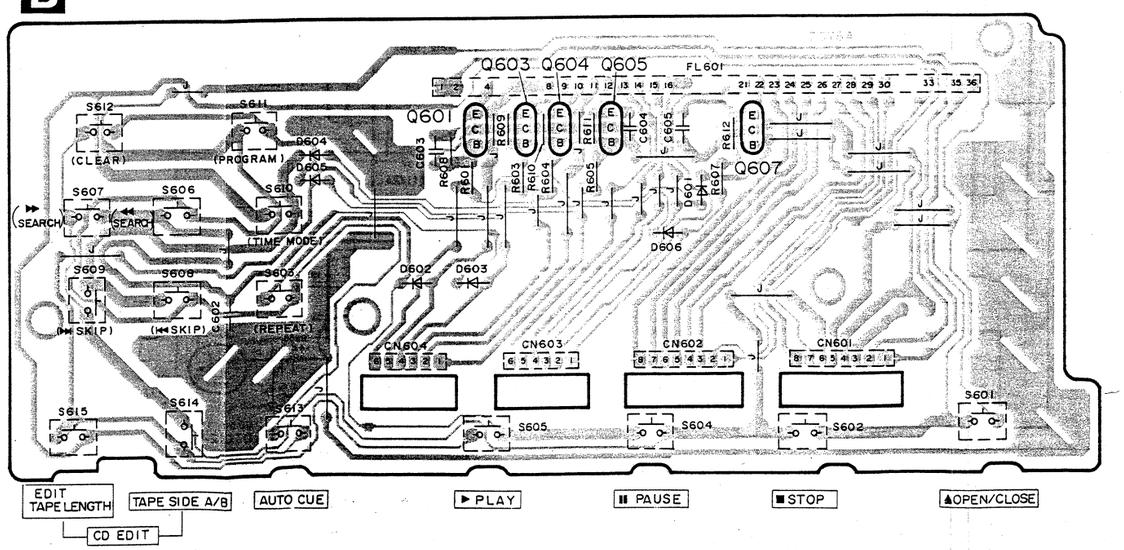

E POWER S

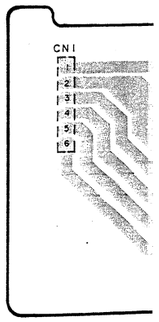

10
11
12
13
14
15
16
17
18
19

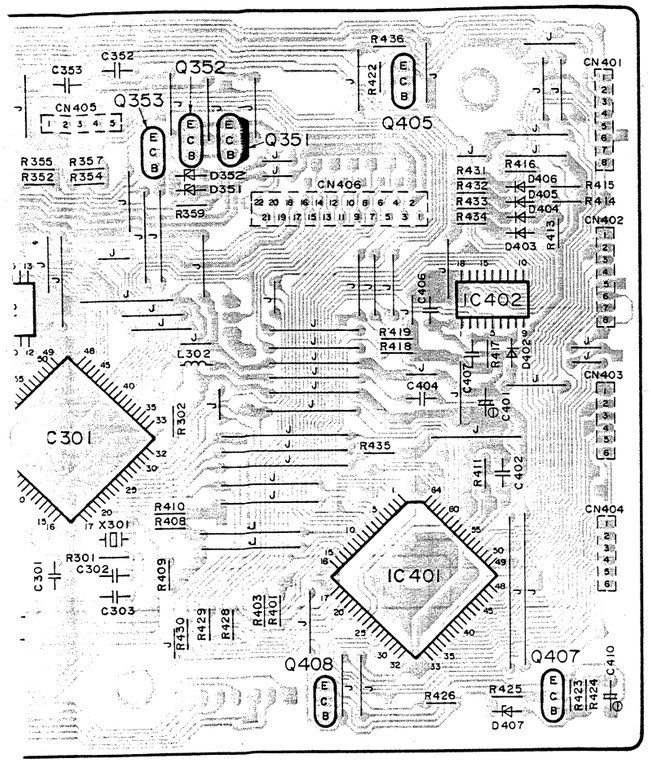
Q352
Q353
Q351
Q405
CN405
CN406
CN401
CN402
CN403
CN404
IC402
IC401
C301
Q408
Q407
D407

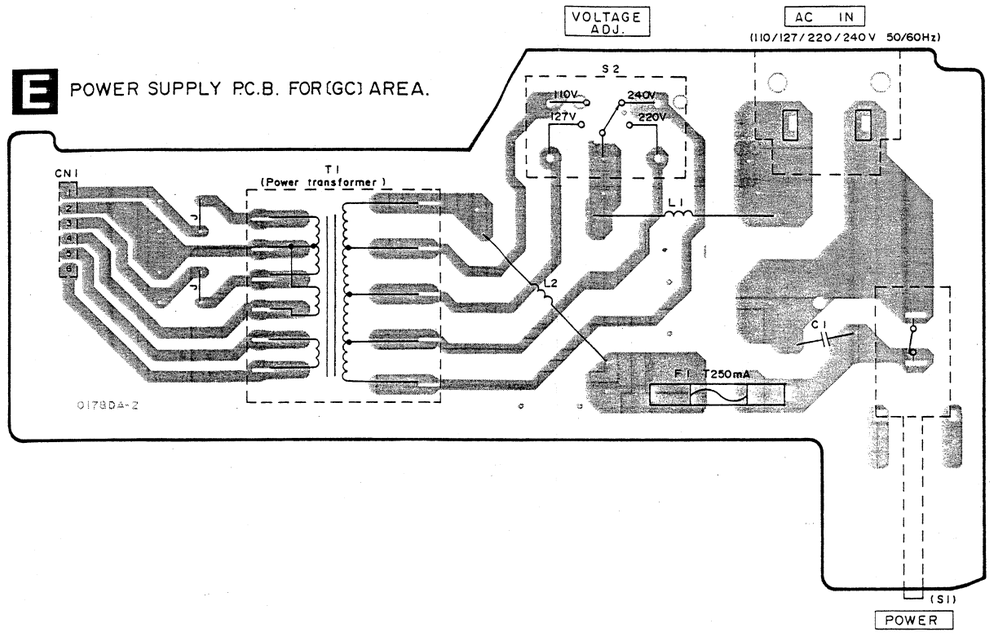
E POWER SUPPLY P.C.B. FOR [GC] AREA.
VOLTAGE ADJ.
AC IN
(110/127/220/240V 50/60Hz)
S2
110V
127V
240V
220V
CN1
T1
(Power transformer)
L1
L2
C1
F1 T250mA
0178DA-2
(S1)
POWER

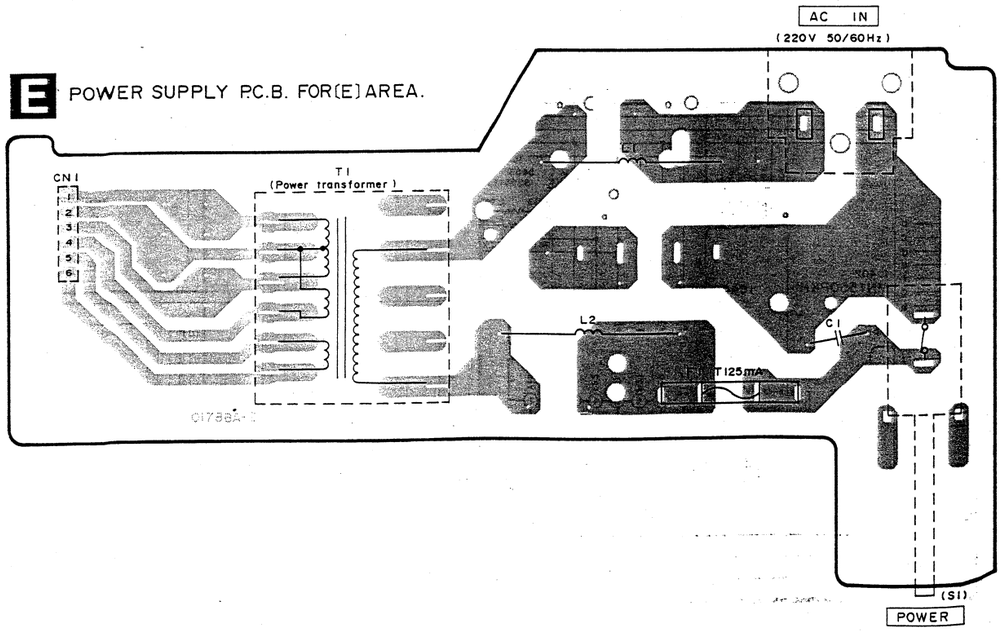
E POWER SUPPLY P.C.B. FOR [E] AREA.
AC IN
(220V 50/60Hz)
CN1
T1
(Power transformer)
L1
L2
C1
F1 T125mA
(S1)
POWER

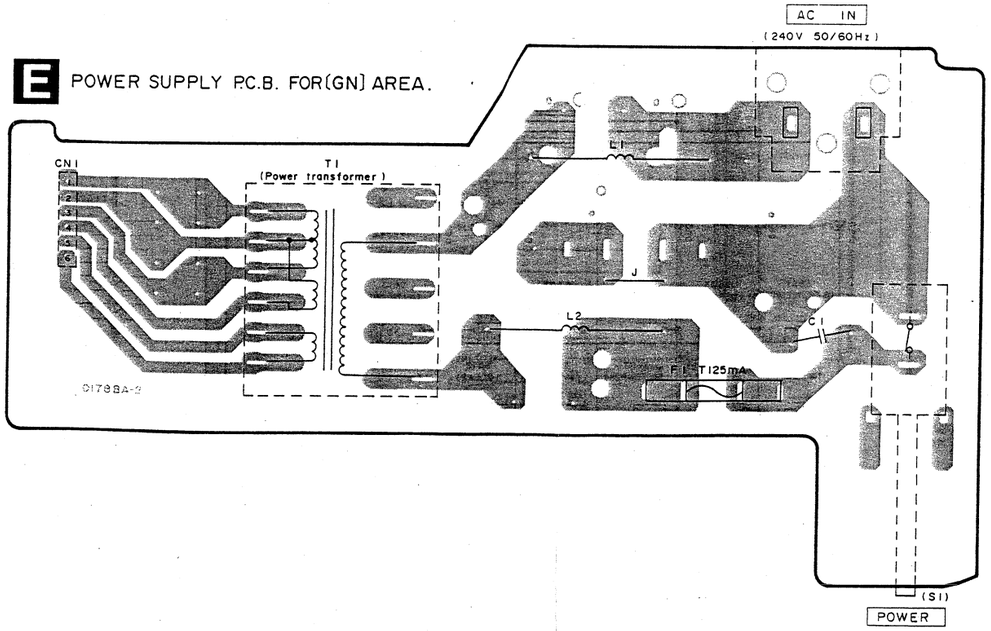
E POWER SUPPLY P.C.B. FOR [GN] AREA.
AC IN
(240V 50/60Hz)
CN1
T1
(Power transformer)
L1
L2
C1
F1 T125mA
(S1)
POWER

WIRING CONNECTION DIAGRAM

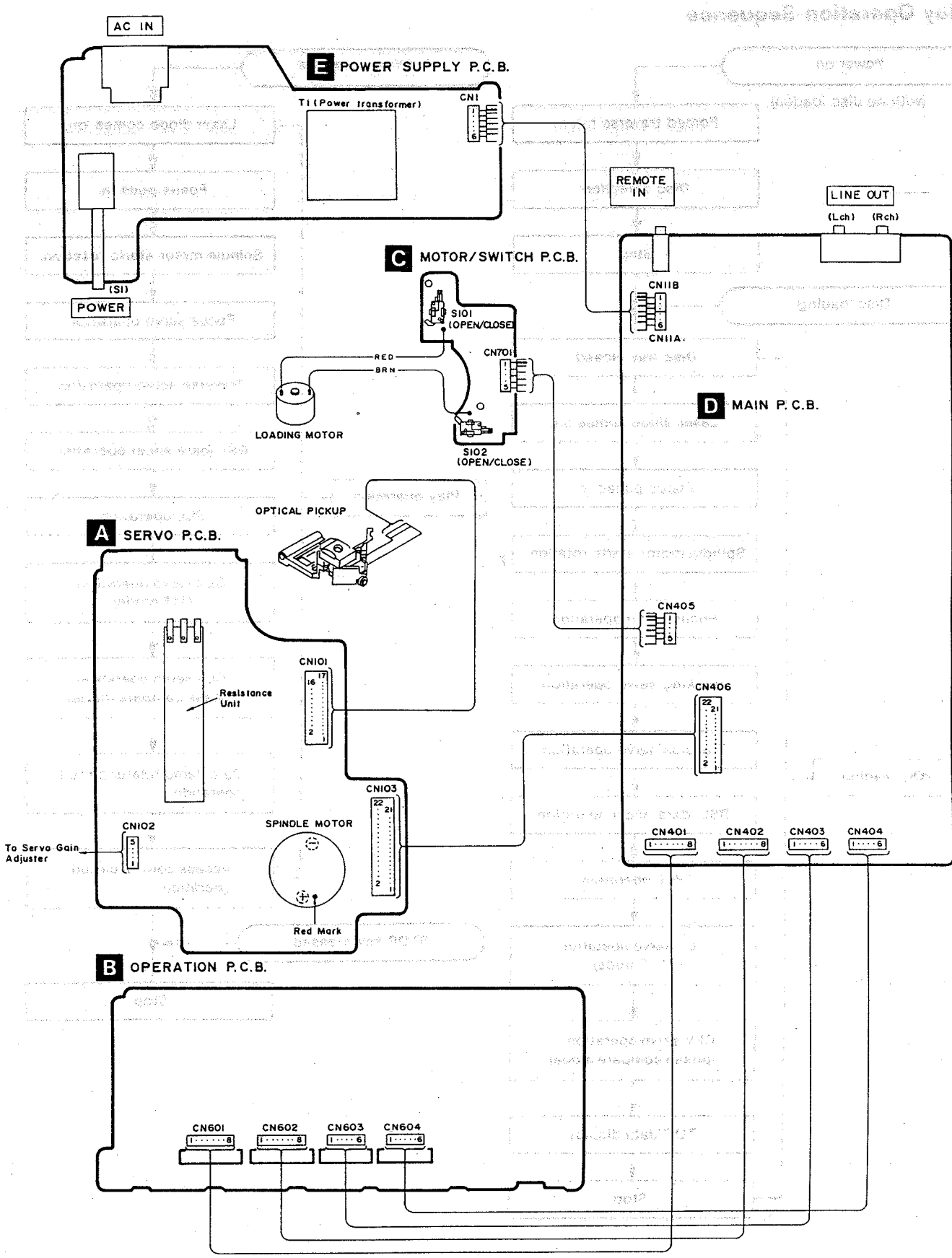

■ TROUBLESHOOTING GUIDE

SL-PJ325 Operation Sequence Check Sheet

Play Operation Sequence

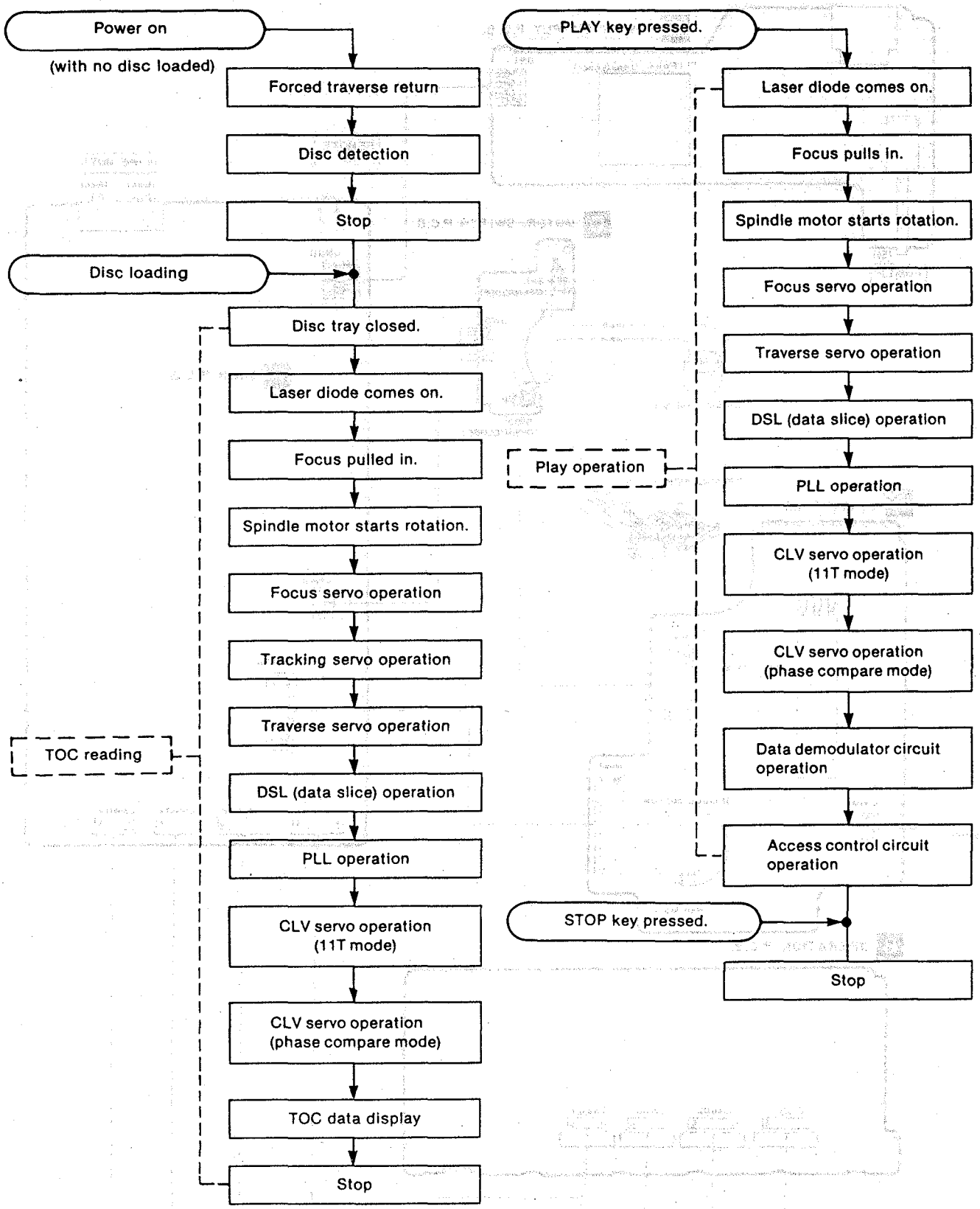

(Operation Sequence Just After Power On)

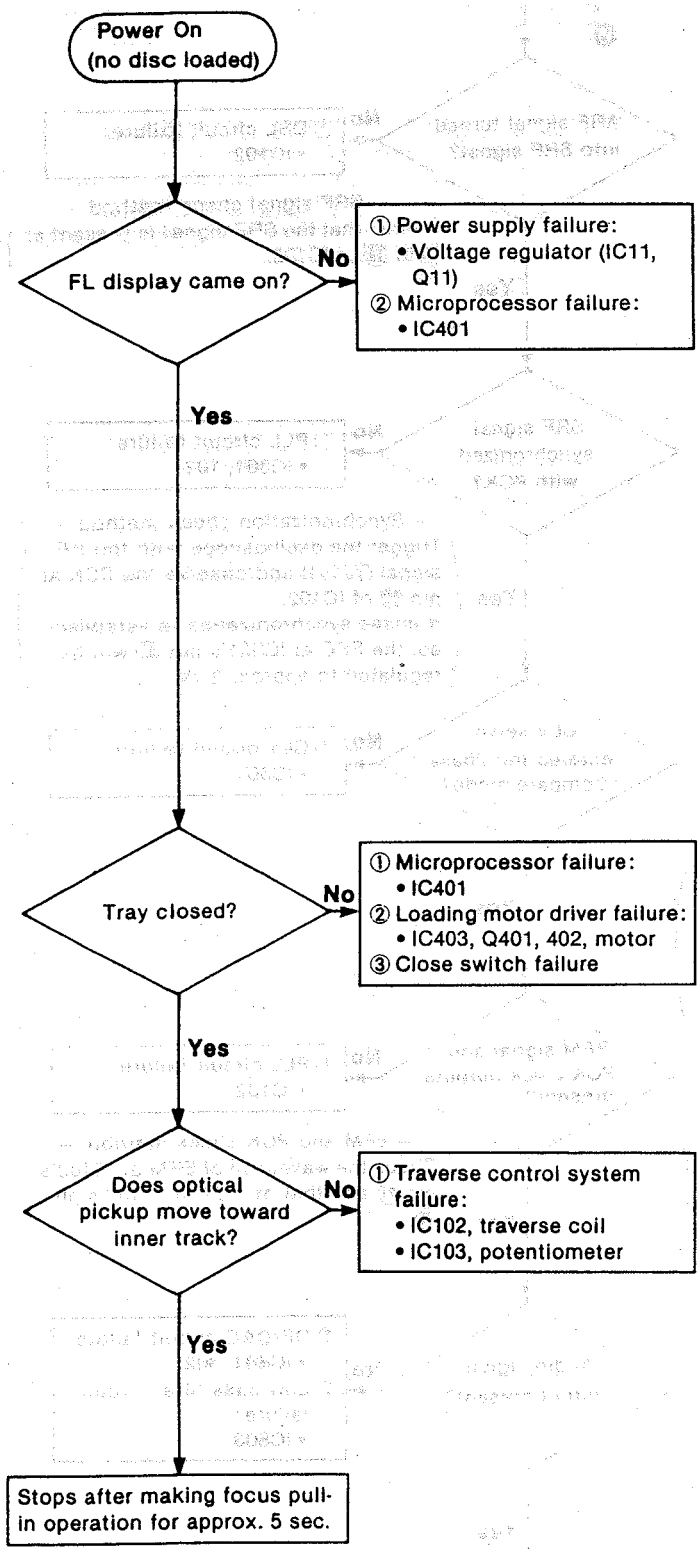

(TOC Read Operation-PLAY Operation)

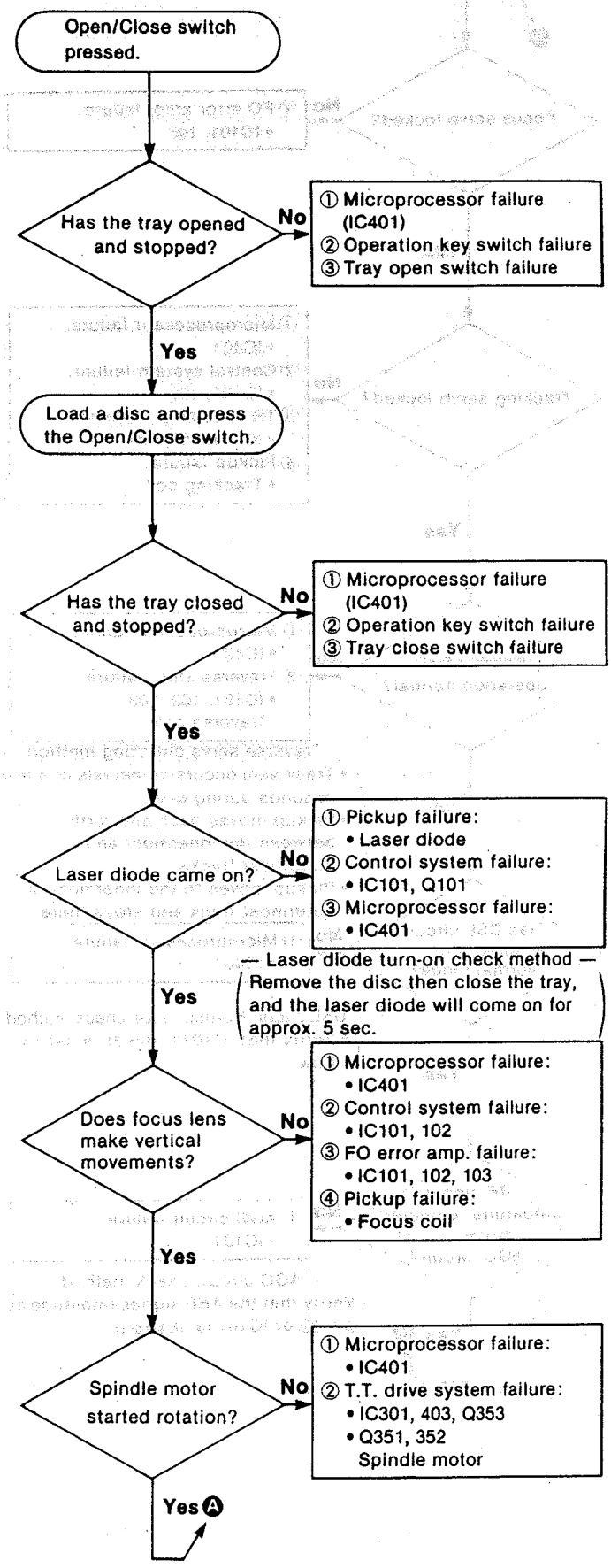

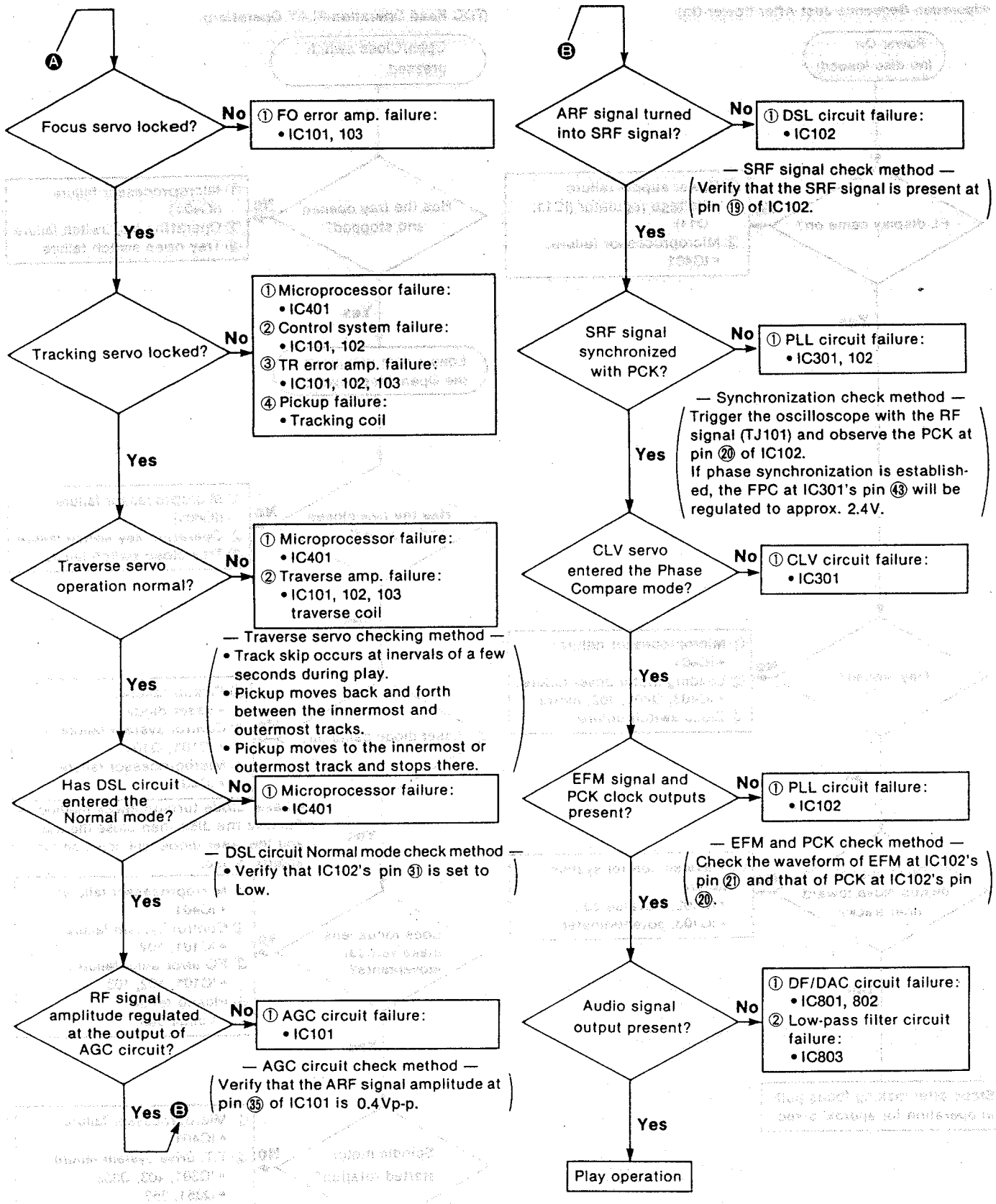
Ⓐ
Focus servo locked?
No
① FO error amp. failure:
• IC101, 103
Yes
Tracking servo locked?
No
① Microprocessor failure:
• IC401
② Control system failure:
• IC101, 102
③ TR error amp. failure:
• IC101, 102, 103
④ Pickup failure:
• Tracking coil
Yes
Traverse servo operation normal?
No
① Microprocessor failure:
• IC401
② Traverse amp. failure:
• IC101, 102, 103
traverse coil
— Traverse servo checking method —
• Track skip occurs at inervals of a few seconds during play.
• Pickup moves back and forth between the innermost and outermost tracks.
• Pickup moves to the innermost or outermost track and stops there.
Yes
Has DSL circuit entered the Normal mode?
No
① Microprocessor failure:
• IC401
— DSL circuit Normal mode check method —
• Verify that IC102's pin ㉛ is set to Low.
Yes
RF signal amplitude regulated at the output of AGC circuit?
No
① AGC circuit failure:
• IC101
— AGC circuit check method —
Verify that the ARF signal amplitude at pin ㉟ of IC101 is 0.4Vp-p.
Yes Ⓑ
Ⓑ
ARF signal turned into SRF signal?
No
① DSL circuit failure:
• IC102
— SRF signal check method —
Verify that the SRF signal is present at pin ⑲ of IC102.
Yes
SRF signal synchronized with PCK?
No
① PLL circuit failure:
• IC301, 102
— Synchronization check method —
Trigger the oscilloscope with the RF signal (TJ101) and observe the PCK at pin ⑳ of IC102.
If phase synchronization is established, the FPC at IC301's pin ㊸ will be regulated to approx. 2.4V.
Yes
CLV servo entered the Phase Compare mode?
No
① CLV circuit failure:
• IC301
Yes
EFM signal and PCK clock outputs present?
No
① PLL circuit failure:
• IC102
— EFM and PCK check method —
Check the waveform of EFM at IC102's pin ㉑ and that of PCK at IC102's pin ⑳.
Yes
Audio signal output present?
No
① DF/DAC circuit failure:
• IC801, 802
② Low-pass filter circuit failure:
• IC803
Yes
Play operation

REPLACEMENT PARTS LIST

Notes : * Important safety notice:
Components identified by ⚠ mark have special characteristics important for safety. When replacing any of these components use only manufacturer's specified parts.
* The parenthesized indications in the Remarks columns specify the areas. (Refer to the cover page for area.)
Parts without these indications can be used for all areas.
* Remote Control Ass'y:
Supply period for three years from termination of production.
* MBV Indicates in Remarks columns parts that are supplied by MBV.

Ref. No.	Part No.	Part Name & Description	Remarks
		CABINET AND CHASSIS	
1	RKM0015-1K	TOP CASE	
2	SJT390	FUSE HOLDER	⚠
4	RGK0057F-K	TRAY ORNAMENT	
5	RGR0011L-H	REAR PANEL	(E)
5	RGR0011M-E	REAR PANEL	(GC)
5	RGR0011L-J	REAR PANEL	(GN)
6	RKA0011A-2	FOOT	
7	RMK0031-2	CHASSIS	
8	RMR0084	POWER SW ROD	
9	RMR0264-2	FL HOLDER	
10	SUSD144	EARTH CONTACT	
11	RFKGLPJ325P	FRONT PANEL ASS'Y	
11-1	RKW0105A-K	WINDOW	
12	RGU0096B-K	EDIT BUTTON	
13	RGU0329	SKIP BUTTON	
14	RGU0330	PROGRAM BUTTON	
15	SBC666-1	POWER BUTTON	
16	SHE185-2	P. C. B. SUPPORT	
		SCREWS	
N1	RHD30007	SCREW	
N2	XTBS3+8JFZ1	SCREW	
N3	XTB3+8JFZ	SCREW	
N4	XTB3+16JFZ	SCREW	
N5	XTB3+8F	SCREW	
		TRAVERSE DECK	
101	RFKNLP370PAK	DISC TRAY ASS'Y	
102	RMQ0044	PIN	
103	SHRD150	ROLLER HOLDER	
104	SDRD12	ROLLER	
105	SUSD83	SPRING	
106	SIRD96-1	LOCK LEVER	
107	SFUMZ15R61	WASHER	
108	SIRD98-3	DISC TRAY	
109	SIRD107-1	TRAY BASE	
110	SNSD36	SCREW	
111	SIRD40-2	RACK GEAR	
112	SIRD42-5	CLAMPER	
113	SOYD2	CLAMPER YOKE	

Ref. No.	Part No.	Part Name & Description	Remarks
114	SOMD4	CLAMPER MAGNET	
115	SIRD51-1	CLAMPER HOLDER	
116	SDOD29-2	RING	
117	SRQA010N04	SPRING	
118	SDOD28-2E	TURNTABLE	
118-1	XXE26D5	SCREW	
119	SISD22-2	TRAVERSE BASE	
120	SHGD148	STOPPER RUBBER	
121	RMQ0048	SCREW	
122	SHGD153-1	CUSHION RUBBER	
123	SUSD137-1	SPRING(B)	
124	SUSD136-3	SPRING(A)	
125	SUSD145-1	SPRING(C)	
126	SNSD33	SCREW	
127	SJGDRF310T-2	SPINDLE MOTOR	
128	SHRD185	LOCK UNIT	
129	SUXD123-1	GUIDE SHAFT	
130	SUWD112-2	GUIDE SHAFT HOLDER	
131	XTB3+10G	SCREW	
132	RFKNLPC363P	YOKE(A)	
133	SOYD22-1	YOKE(B)	
134	SORD46-E	COIL	
135	SOAD70A	OPTICAL PICKUP	⚠
136	SHWD33	WASHER	
137	SORD37-3	ROLLER	
138	SHWD34	WASHER	
139	SNSD31	SCREW	
140	SHRD176-2	BRUSH HOLDER	
141	SNSD39	SCREW	
142	RFKNLP150-K	LOADING BASE ASS'Y	
142-1	XYN26+F7	SCREW	
142-2	RMG0050	MOTOR RUBBER	
143	RMG0121	BELT	
146	RFKPVDA10-K	LOADING MOTOR ASS'Y	
147	SIKD150051F	FLAT CABLE(5P)	
148	XTB3+8G	SCREW	
149	SIKD150221-1	FLAT CABLE	

■ EXPLODED VIEWS

•Cabinet and chassis parts

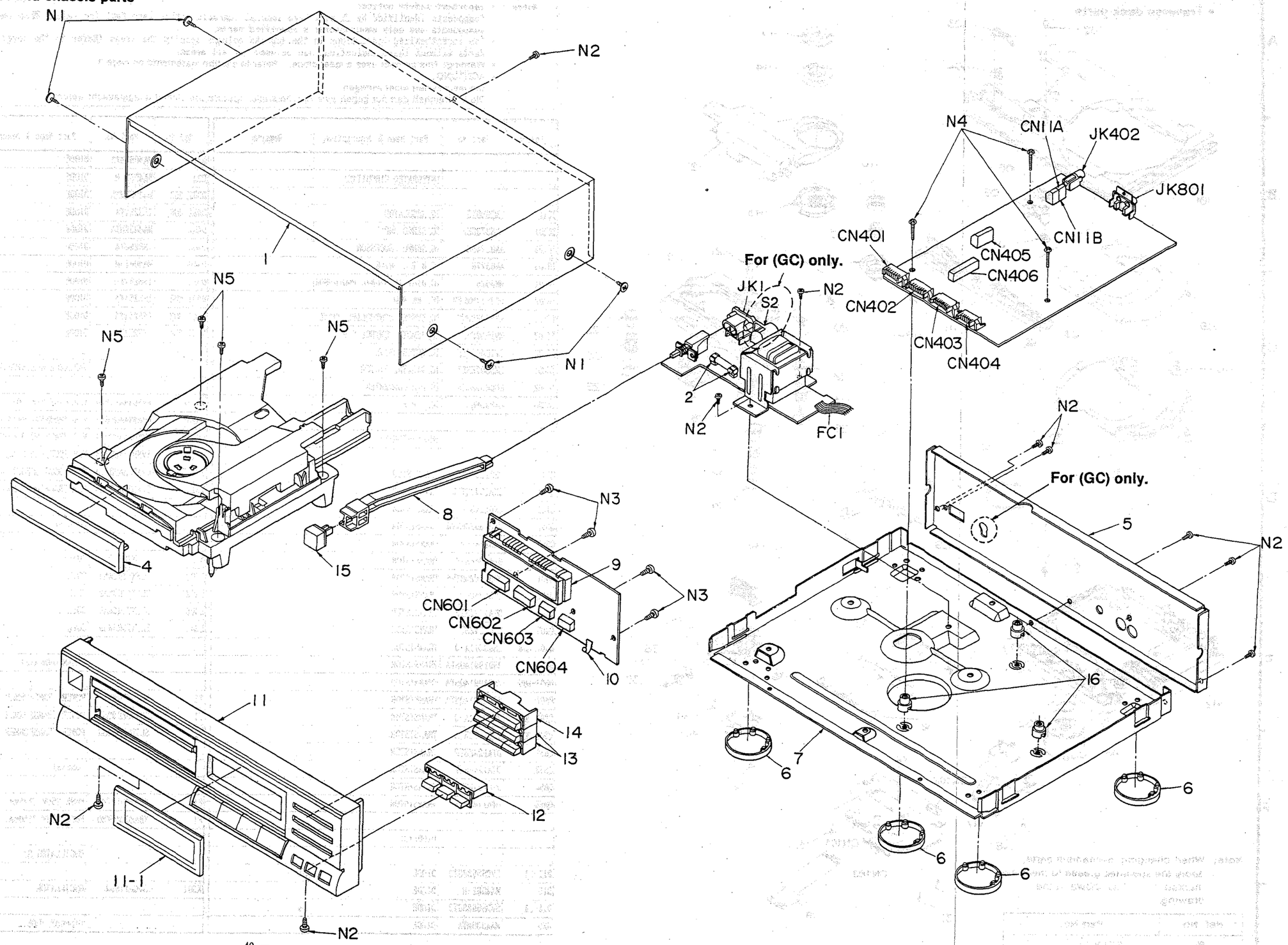

EXPLODED VIEWS

- **Traverse deck parts**

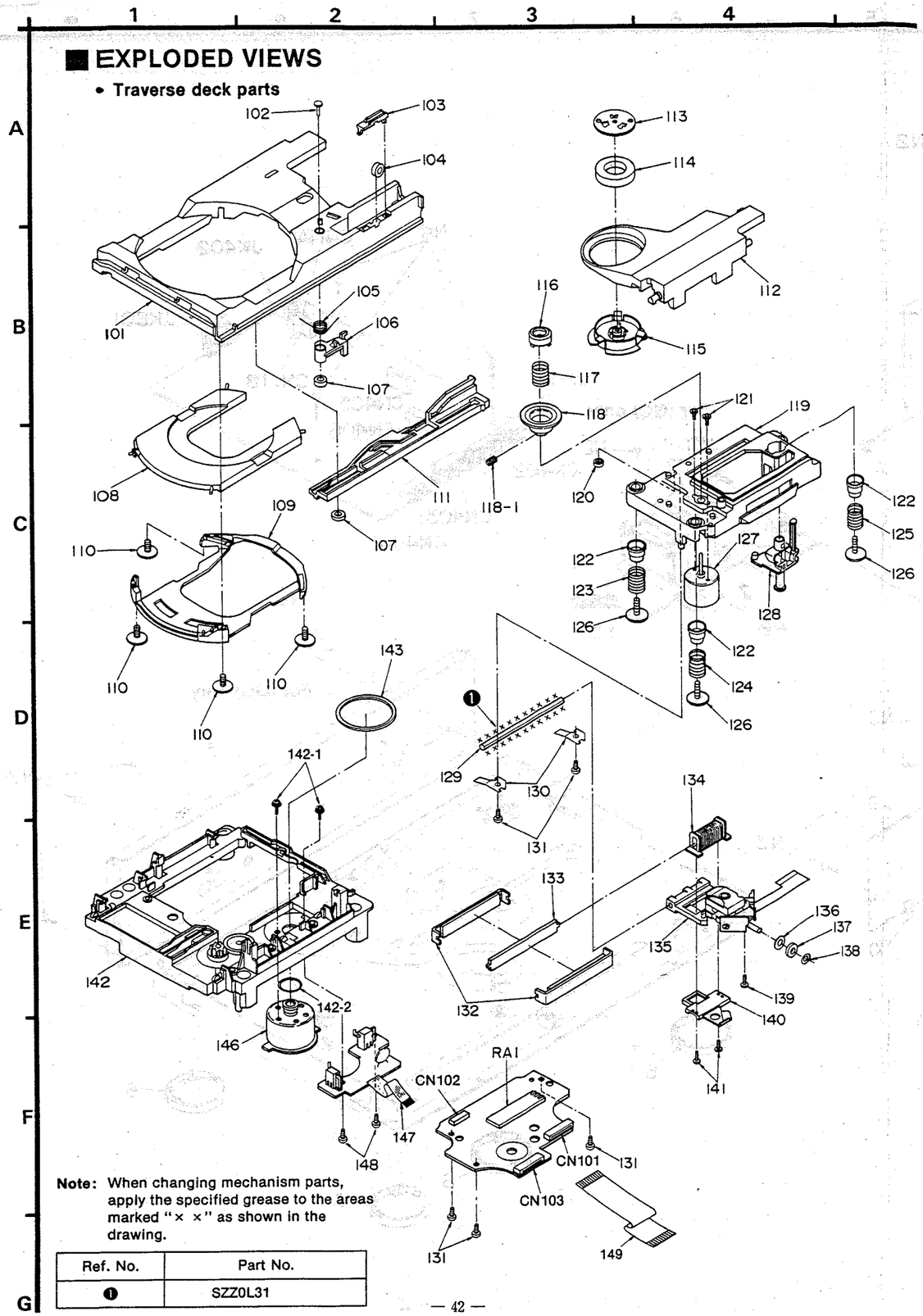

Note: When changing mechanism parts, apply the specified grease to the areas marked "× ×" as shown in the drawing.

Ref. No.	Part No.
❶	SZZ0L31

REPLACEMENT PARTS LIST

Notes : * Important safety notice:
Components identified by ⚠ mark have special characteristics important for safety. When replacing any of these components use only manufacturer's specified parts.
* The parenthesized indications in the Remarks columns specify the areas. (Refer to the cover page for area.) Parts without these indications can be used for all areas.
* Warning: This product uses a laser diode. Refer to caution statements on page 3.
* ACHTUNG:
Die lasereinheit nicht zerlegen.
Die lasereinheit darf nur gegen eine vom hersteller spezifizierte einheit ausgetauscht werden.

Ref. No.	Part No.	Part Name & Description	Remarks
		INTEGRATED CIRCUIT(S)	
IC11	LM2940T5	IC, REGULATOR	
IC101	AN8373SE2	IC, SERVO AMP	
IC102	AN8374SE2	IC, SERVO PROCESSOR	
IC103	AN8377N	IC, B. T. L DRIVE	
IC301	MN6625	IC, DIGITAL SIGNAL PROCESSOR	
IC302	LC3517BMLE2	IC, 16K RAM	
IC401	MN15283PKG	IC, SYSTEM CONTROL&FL DRIVE	
IC402	MN1550PKH	IC, REMOTE CONTROL S. P	
IC403	SVIBA4558F	IC, MOTOR DRIVE	
IC801	SM5807ESET	IC, DIGITAL FILTER	
IC802	UPD6376GSE1	IC, D/A CONVERTER	
IC803	LM833M63	IC, L. P. F	
		TRANSISTOR(S)	
Q11	2SB1238QSTV6	TRANSISTOR	
Q101	2SA1547QTV2	TRANSISTOR	
Q102	2SB1240-P	TRANSISTOR	
Q351	2SD1862QRTV6	TRANSISTOR	
Q352	2SB1240-P	TRANSISTOR	
Q353	DTA124ESTP	TRANSISTOR	
Q401	2SD1862QRTV6	TRANSISTOR	
Q402	2SB1240-P	TRANSISTOR	
Q404	DTA143ZSTP	TRANSISTOR	
Q405	DTC124EST	TRANSISTOR	
Q407, 408	2SC3311A-Q	TRANSISTOR	
Q601	2SD1991AQSTA	TRANSISTOR	
Q603-605	2SD1991AQSTA	TRANSISTOR	
Q607	2SD1991AQSTA	TRANSISTOR	
Q801, 802	2SC3311A-Q	TRANSISTOR	
Q803, 804	2SD1450RTA	TRANSISTOR	
Q851	DTA124ESTP	TRANSISTOR	
Q853	DTA124ESTP	TRANSISTOR	
Q854	DTC124EST	TRANSISTOR	
Q855	DTA114ESTP	TRANSISTOR	
		DIODE(S)	
D11-14	SVDS5688GT3	DIODE	⚠
D15	MA4062-H	DIODE	
D16-19	SVDS5688GT3	DIODE	⚠
D20	MA4330MTA	DIODE	

Ref. No.	Part No.	Part Name & Description	Remarks
D21	MA4082MTA	DIODE	
D22	MA4062-H	DIODE	
D351, 352	MA4051MTA	DIODE	
D402-406	1SS254TA	DIODE	
D407	MA4039HTA	DIODE	
D409	1SS254TA	DIODE	
D410	MA4091-M	DIODE	
D411	1SS254TA	DIODE	
D601-606	1SS254TA	DIODE	
D801, 802	1SS254TA	DIODE	
D851-854	1SS254TA	DIODE	
		VARIABLE RESISTOR(S)	
VR101	EVND3AA00B14	V. R, BEST EYE ADJ.	
VR102	EVND3AA00B14	V. R, TRACKING GAIN ADJ.	
VR103	EVND3AA00B14	V. R, TRACKING OFFSET ADJ.	
VR104	EVND3AA00B14	V. R, FOCUS GAIN ADJ.	
VR105	EVND3AA00B14	V. R, FOCUS OFFSET ADJ.	
VR106	EVND3AA00B24	V. R, TRACKING BALANCE ADJ.	
		COIL(S)	
L1, 2	SLQX400-D	COIL	⚠
L302	ELEXT2R2KA9	COIL	
L402	ELEXT3R3KA9	COIL	
L406	ELEXT3R3KA9	COIL	
L803	ELEXT3R3KA9	COIL	
		TRANSFORMER(S)	
T1	SLTD5K097SE	POWER TRANSFORMER	(E) ⚠
T1	SLTD5K099SX	POWER TRANSFORMER	(GC) ⚠
T1	SLTD5K098SG	POWER TRANSFORMER	(GN) ⚠
		FUSE(S)	
F1	XBA2C012TB0	FUSE 250V T125mA	(E, GN) ⚠
F1	XBA2C025TB0	FUSE 250V T250mA	(GC) ⚠
		OSCILLATOR(S)	
X301	SVQAT1693	OSCILLATOR	
		DISPLAY TUBE	

Ref. No.	Part No.	Part Name & Description	Remarks
FL601	RSL0052-F	DISPLAY TUBE	
		SWITCH(ES)	
S1	ESB8249V	SW, POWER	⚠
S2	SSR187-1	SW, VOLTAGE ADJ.	(GC)⚠
S101	SSPD17-1	SW, LOADING DET.	
S102	SSPD18-1	SW, LOADING DET.	
S601	EVQ21405R	SW, OPEN/CLOSE	
S602	EVQ21405R	SW, STOP	
S603	EVQ21405R	SW, REPEAT	
S604	EVQ21405R	SW, PAUSE	
S605	EVQ21405R	SW. PLAY	
S606	EVQ21405R	SW, B. SEARCH	
S607	EVQ21405R	SW, F. SEARCH	
S608	EVQ21405R	SW, B. SKIP	
S609	EVQ21405R	SW, F. SKIP	
S610	EVQ21405R	SW, TIME	
S611	EVQ21405R	SW, PROGRAM	
S612	EVQ21405R	SW, CLEAR	
S613	EVQ21405R	SW, A. CUE	
S614	EVQ21405R	SW, SIDE A/B	
S615	EVQ21405R	SW, EDIT	
		CONNECTOR(S) & SOCKET(S)	
CN101	SJSD1727-1	SOCKET(17P)	
CN102	EMCS0564M	CONNECTOR(5P)	
CN103	SJSD2227-1	SOCKET(22P)	
CN401, 402	RJU003K008M1	SOCKET(8P)	
CN403, 404	RJU003K006M1	SOCKET(6P)	
CN405	RJS1A1705	CONNECTOR(5P)	
CN406	SJSD2221	CONNECTOR(22P)	
CN601, 602	RJT003K008M1	CONNECTOR(8P)	
CN603, 604	RJT003K006M1	CONNECTOR(6P)	
CN11A, 11B	RJS1A1703	CONNECTOR (3P)	
		JACK(S)	
JK1	SJS9236	AC INLET	(E, GC)⚠
JK1	SJSD16	AC INLET	(GN)⚠
JK402	RJJ33TR01	JACK, REMOTE IN	
JK801	RJH3201N	JACK, LINE OUT	
		FLAT CABLE(S)	
FC1	RWJ1806090KQ	FLAT CABLE(6P)	
		MAGNET RESISTOR ELEMENTS	
RA1	EWS7M0A00Q53	RESISTANCE UNIT	

Ref. No.	Part No.	Part Name & Description	Remarks
		PACKING MATERIAL	
P1	RPG0880	PACKING CASE	
P2	RPN0101	PAD	
P3	XZB60X60A01	PROTECTION BAG(UNIT)	
P4	SPSD152	ACCESSORIES BOX	
P5	SPB1061	PROTECTION BAG(CORD)	
		ACCESSORIES	
A1	RQT0932-G	INSTRUCTION MANUAL	(GC, GN)
A1	RFKSLPJ325E	INSTRUCTION MANUAL ASS'Y	(E)
A2	SFDAC05E03	AC POWER SUPPLY CORD	(E)⚠
A2	RJA0004	AC POWER SUPPLY CORD	(GC)⚠
A2	SJA173	AC POWER SUPPLY CORD	(GN)⚠
A3	SJP2249-3	STEREO CONNECTION CABLE	
A4	SJP2257T	L-TYPE CABLE	
A5	RFA0011-1	CABINET EXTENDER	
A5-1	RMA0066	BASE	
A5-2	XTB3+8JFZ	SCREW	
A6	RQA0013	WARRANTY CARD	(E)
A6	SQX7186	WARRANTY CARD	(GN)
A7	RQCB0169	SERVICENTER LIST	
A8	SJP9215	POWER PLUG ADAPTOR	(GC)⚠

RESISTORS & CAPACITORS

Notes : * Capacity valuse are in microfarads (uF) unless specified otherwise, P=Pico-farads(pF) F=Farads(F)
* Resistance values are in ohms, unless specified otherwise, 1K=1,000(OHM) , 1M=1,000k(OHM)

Ref. No.	Part No.	Values & Remarks
		RESISTORS
R10-13	ERDS2TJ331	1/4W 330
R15	ERDS2TJ102	1/4W 1K
R16	ERDS2TJ120T	1/4W 12
R101	ERDS2TJ471	1/4W 470
R102	ERJ6GEYJ120V	1/10W 12
R103	ERJ6GEYJ122V	1/10W 1.2K
R104	ERJ6GEYJ471V	1/10W 470
R105, 106	ERJ6GEYJ102V	1/10W 1K
R108	ERJ6GEYJ224V	1/10W 220K
R110	ERDS2TJ222	1/4W 2.2K
R111	ERJ6GEYJ104V	1/10W 100K
R113	ERJ6GEYJ472V	1/10W 4.7K
R114	ERJ6GEYJ683V	1/10W 68K
R116	ERJ6GEYJ562V	1/10W 5.6K
R117	ERJ6GEYJ123V	1/10W 12K
R118	ERJ6GEYJ333V	1/10W 33K
R119	ERJ6GEYJ223V	1/10W 22K
R122	ERDS2TJ104	1/4W 100K
R123	ERJ6GEYJ470V	1/10W 47
R124	ERJ6GEYJ103V	1/10W 10K
R125	ERJ6GEYJ222V	1/10W 2.2K
R127	ERDS2TJ681	1/4W 680
R128	ERJ6GEYJ103V	1/10W 10K
R301	ERDS2EJ121	1/4W 120
R302	ERDS2TJ101	1/4W 100
R351	ERDS2TJ103	1/4W 10K
R352	ERDS2TJ154	1/4W 150K
R353	ERDS2TJ123	1/4W 12K
R354	ERDS2TJ154	1/4W 150K
R355, 356	ERDS2TJ333	1/4W 33K
R357	ERDS2TJ8R2T	1/4W 8.2
R358, 359	ERDS2TJ101	1/4W 100
R401	ERDS2TJ472	1/4W 4.7K
R402	ERDS2TJ913	1/4W 91K
R403	ERDS2TJ472	1/4W 4.7K
R404	ERDS2TJ913	1/4W 91K
R405, 406	ERDS2TJ124T	1/4W 120K
R407	ERDS2TJ101	1/4W 100
R408-410	ERDS2TJ472	1/4W 4.7K
R411	ERDS2TJ104	1/4W 100K
R413-416	ERDS2TJ222	1/4W 2.2K
R417	ERDS2TJ473	1/4W 47K
R418, 419	ERDS2TJ472	1/4W 4.7K
R422	ERDS2TJ103	1/4W 10K
R423	ERDS2TJ221	1/4W 220
R424-426	ERDS2TJ472	1/4W 4.7K

Ref. No.	Part No.	Values & Remarks
R428-430	ERDS2TJ472	1/4W 4.7K
R431-434	ERDS2TJ103	1/4W 10K
R435	ERDS2TJ472	1/4W 4.7K
R436	ERDS2TJ273	1/4W 27K
R438	ERDS2TJ100	1/4W 10
R440	ERDS2TJ332	1/4W 3.3K
R601	ERDS2TJ102	1/4W 1K
R603-605	ERDS2TJ102	1/4W 1K
R607	ERDS2TJ102	1/4W 1K
R608-612	ERDS2TJ223	1/4W 22K
R801	ERDS2TJ561	1/4W 560
R802-804	ERDS2TJ102	1/4W 1K
R805, 806	ERDS2TJ104	1/4W 100K
R807, 808	ERDS2TJ333	1/4W 33K
R809, 810	ERDS2TJ273	1/4W 27K
R811, 812	ERDS2TJ683	1/4W 68K
R813, 814	ERDS2TJ471	1/4W 470
R815, 816	ERDS2TJ102	1/4W 1K
R821, 822	ERDS2TJ471	1/4W 470
R823, 824	ERDS2TJ472	1/4W 4.7K
R825, 826	ERDS2TJ471	1/4W 470
R852	ERDS2TJ472	1/4W 4.7K
R854	ERDS2TJ472	1/4W 4.7K
R855, 856	ERDS2TJ102	1/4W 1K
R857	ERDS2TJ471	1/4W 470
		CAPACITORS
C1	ECKWKC103PF2	400V 0.01U
C10	ECEA1CU222	16V 2200U
C11	ECEA1CU102B	16V 1000U
C12	ECEA1CU221	16V 220U
C15	ECEA0JK470	6.3V 47U
C16, 17	ECEA1CU331	16V 330U
C18, 19	ECEA1VU101B	35V 100U
C20	ECFR1E104ZF5	25V 0.1U
C21, 22	ECKR1H103ZF5	50V 0.01U
C24	ECEA1CU221	16V 220U
C25	ECBT1E103ZF	25V 0.01U
C101	ECEA1CKS220	16V 22U
C102	ECEA1HKS010	50V 1U
C103	ECEA1CKS220	16V 22U
C106	ECUV1E104ZFN	25V 0.1U
C107	ECEA0GKS101	4V 100U
C108	ECEA0JKS470	6.3V 47U
C109	ECEA1HKS010	50V 1U
C110	ECUV1H681KBN	50V 680P
C111	ECUV1C224KBM	16V 0.22U
C112	ECUV1H331KBN	50V 330P

Ref. No.	Part No.	Values & Remarks
C113	ECEA1HSN010I	50V 1U
C114	ECUV1E333KBN	25V 0.033U
C115	ECEA1HSN010I	50V 1U
C116	ECUV1E333KBN	25V 0.033U
C117	ECBT1H102KB5	50V 1000P
C119, 120	ECEA1CKN4R7	16V 4.7U
C122	ECEA0JKA220	6.3V 22U
C123	ECUV1E104ZFN	25V 0.1U
C124	ECUV1E823KBM	25V 0.082U
C125	ECUV1C224KBM	16V 0.22U
C127	ECA0JKF101I	6.3V 100U
C128	ECEA1CKA101	16V 100U
C132	ECUV1E104KBM	25V 0.1U
C133	ECUV1H330KCN	50V 33P
C134, 135	ECUV1C224KBM	16V 0.22U
C136	ECEA0GKS101	4V 100U
C138	ECUV1E104ZFN	25V 0.1U
C139	ECUV1H470KCN	50V 47P
C140	ECUV1E103KBN	25V 0.01U
C141-144	ECUV1H470KCN	50V 47P
C145	ECA0JKF101I	6.3V 100U
C146	ECUV1H181KCN	50V 180P
C147	ECUV1H472KBN	50V 4700P
C148	ECEA1CKN4R7	16V 4.7U
C149	ECUV1E104ZFN	25V 0.1U
C150	ECUV1E103KBN	25V 0.01U
C301	ECFR1E104ZF5	25V 0.1U
C302	ECBT1H6R8K5	50V 6.8P
C303	ECBT1H220J5	50V 22P
C304	ECFR1E104ZF5	25V 0.1U
C351-353	ECBT1H102KB5	50V 1000P
C401	ECEA0JK470	6.3V 47U
C402	ECFR1E104ZF5	25V 0.1U
C404	ECBT1E103ZF	25V 0.01U
C406	ECFR1E104ZF5	25V 0.1U
C407	ECBT1H220J5	50V 22P
C408, 409	ECFR1E104ZF5	25V 0.1U
C410	ECEA1HK010B	50V 1U
C411	ECBT1H102KB5	50V 1000P
C420	ECKW1H103KB5	50V 0.01U
C602	ECBT1H102KB5	50V 1000P
C603-605	ECBT1H101KB5	50V 100P
C801, 802	ECEA1AU101	10V 100U
C803	ECFR1E104ZF5	25V 0.1U
C805	ECFR1E104ZF5	25V 0.1U
C806, 807	ECEA0JK470	6.3V 47U
C809, 810	ECQB1H333KF3	50V 0.033U
C811, 812	ECQB1H102KF3	50V 1000P
C813, 814	ECBT1H220J5	50V 22P

Ref. No.	Part No.	Values & Remarks
C815, 816	ECEA1AN220S	10V 22U
C817, 818	ECBT1H102KB5	50V 1000P
C819, 820	ECEA1CK100B	16V 10U
C821	ECFR1E104ZF5	25V 0.1U
C851	ECEA1CK100B	16V 10U
C852	ECEA0JU471	6.3V 470U

■ PACKING

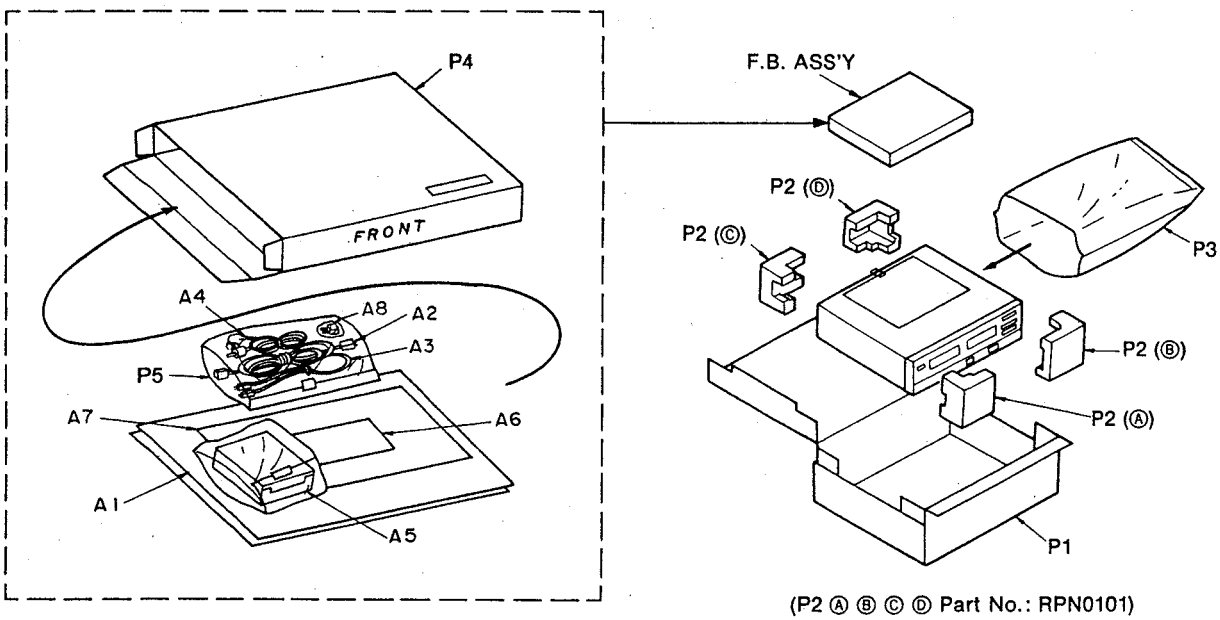

(P2 Ⓐ Ⓑ Ⓒ Ⓓ Part No.: RPN0101)

Printed in Japan
H910403000 NH/YU/KK